#1441

FED. RD. REG. NO.	STATE	PROJECT NO.	MILEPOST	SHEET NO.
9	NEVADA	I-080-4(29)285	IR 80 EL 7.78 E. TO IR 80 EL 8.05 E.	B-1

CT-1

30785

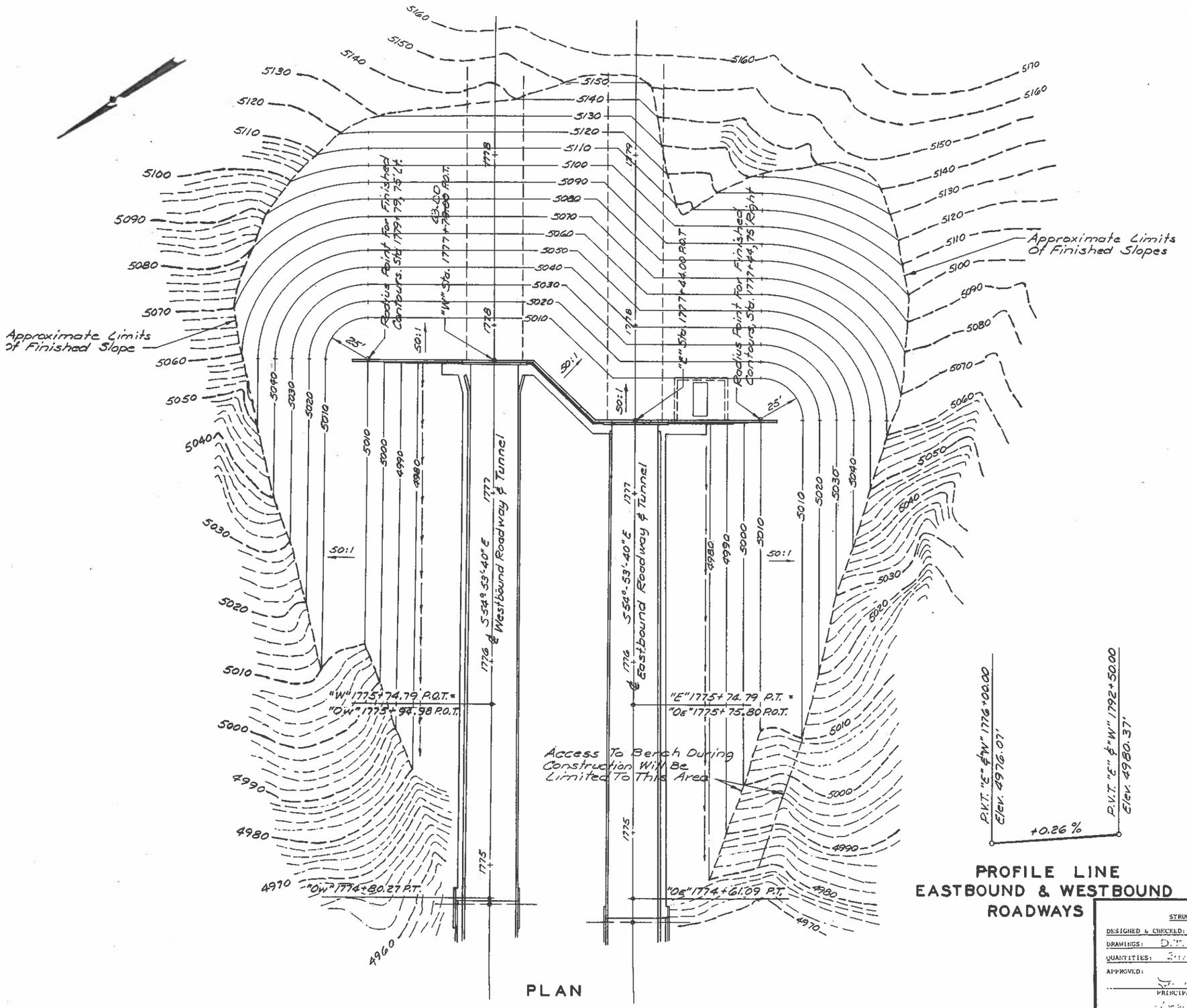

PLAN

PROFILE LINE
EASTBOUND & WESTBOUND
ROADWAYS

GENERAL NOTES

1. DESIGN SPECIFICATIONS: AASHO "STANDARD SPECIFICATIONS FOR HIGHWAY BRIDGES, 1969," AND "INTERIM SPECIFICATIONS THROUGH 1970."
2. CONSTRUCTION SPECIFICATIONS: STATE OF NEVADA DEPARTMENT OF HIGHWAYS "STANDARD SPECIFICATIONS FOR ROAD AND BRIDGE CONSTRUCTION, 1968," AND SUPPLEMENT NO. 1 TO THE "STANDARD SPECIFICATIONS FOR ROAD AND BRIDGE CONSTRUCTION, 1968," EXCEPT AS NOTED BELOW AND IN THE SPECIAL PROVISIONS OF THIS CONTRACT.
3. CONCRETE: ALL CONCRETE SHALL BE CLASS AA MAJOR, UNLESS OTHERWISE NOTED.
4. REINFORCING STEEL: ALL REINFORCING STEEL TO BE ASTM A615 GRADE 60. DIMENSIONS RELATING TO SPACING OF REINFORCING STEEL ARE FROM CENTER TO CENTER OF BARS. BENDING DIMENSIONS ARE FROM OUT TO OUT OF BARS. BAR SIZES THREE (3) TO NINE (9) ARE INDICATED BY THE FIRST NUMBER IN THE MARK, TEN (10) OR LARGER BY THE FIRST TWO NUMBERS.
5. STRUCTURAL STEEL: ALL STRUCTURAL STEEL MEMBERS TO BE ASTM A-36 STEEL UNLESS OTHERWISE NOTED.
6. PILING: ALL PILING TO BE HP 12 X 53. DESIGN BEARING VALUE: 90 TONS. ESTIMATED LENGTH: 20 FEET.
7. FINE SURFACE FINISH: ALL EXPOSED SURFACES OF THE PORTAL WALLS SHALL REQUIRE A FINE SURFACE FINISH. ALL SURFACES IN CONTACT WITH THE GROUND SHALL BE FINE SURFACED FINISHED TO A POINT 1' - 0" BELOW FINISHED GROUND LINES.
8. CONSTRUCTION TYPE CODE X999.

STRUCTURAL DESIGN DIVISION

DESIGNED & CHECKED:

DRAWINGS:

QUANTITIES:

APPROVED:

PRINCIPAL BRIDGE DESIGN ENGINEER

ASSISTANT CHIEF BRIDGE ENGINEER

CHIEF BRIDGE ENGINEER

STATE OF NEVADA
DEPARTMENT OF HIGHWAYS

IR80-EL 7.92 E.

CARLIN CANYON TUNNELS WEST PORTALS

FED. RD. REG. NO.	STATE	PROJECT NO.	MILEPOST	SHEET NO.
9	NEVADA	I-080-4(29)285	IR 80 EL 7.78 E. TO IR 80 EL 8.05 E.	B-2

CT-2

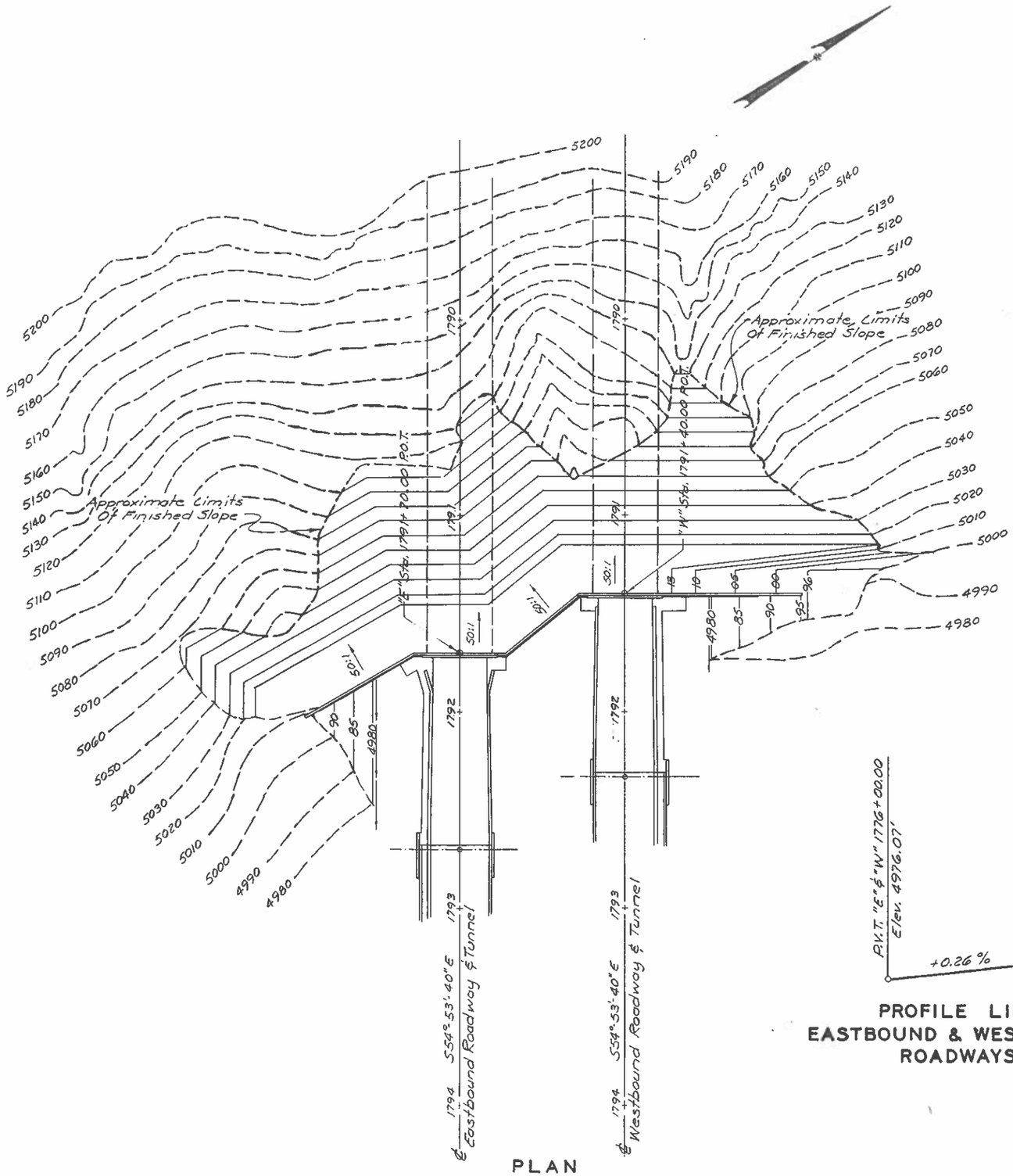

FED. RD. REG. NO.	STATE	PROJECT NO.	MILE POST	SHEET NO.
9	NEVADA	I-080-4(29)285	IR 80 EL 7.78 E. TO IR 80 EL 8.05 E.	B-3

CT-3

NO Overhead Utilities Inside This Perimeter

RIVER

HUMBOLDT

Limits of Cut

WEST PORTAL

B-1066W

B-1066E

WESTBOUND TUNNEL

EASTBOUND TUNNEL

Approximate Limits of Cut

SOUTHERN PACIFIC RAILROAD

EAST PORTAL

B-1111W

B-1111E

Approximate Limits of Cut

PLAN

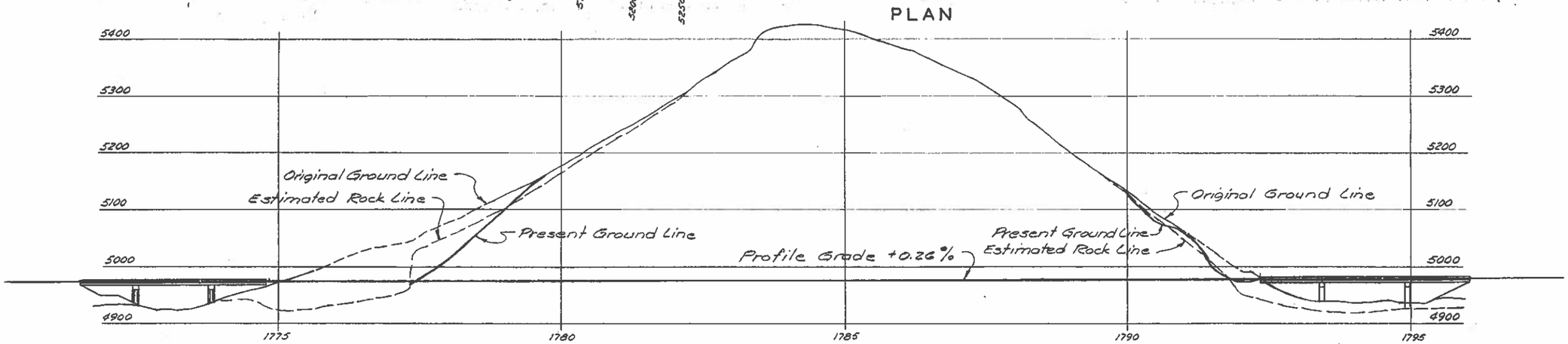

PROFILE – WESTBOUND TUNNEL

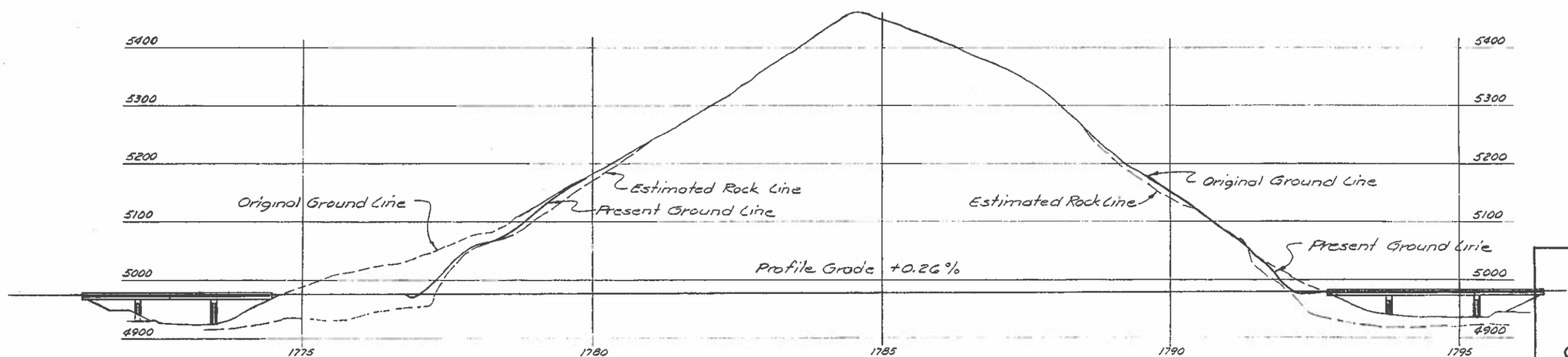

PROFILE – EASTBOUND TUNNEL

STATE OF NEVADA
DEPARTMENT OF HIGHWAYS

IR80–EL 7.92 E.
CARLIN CANYON TUNNELS
PLAN & PROFILE

FED. RD. REG. NO.	STATE	PROJECT NO.	MILE POST	SHEET NO.
9	NEVADA	I-080-4(29)285	IR 80 EL 7.78 E. TO IR 80 EL 8.05 E.	B-14

CT-14

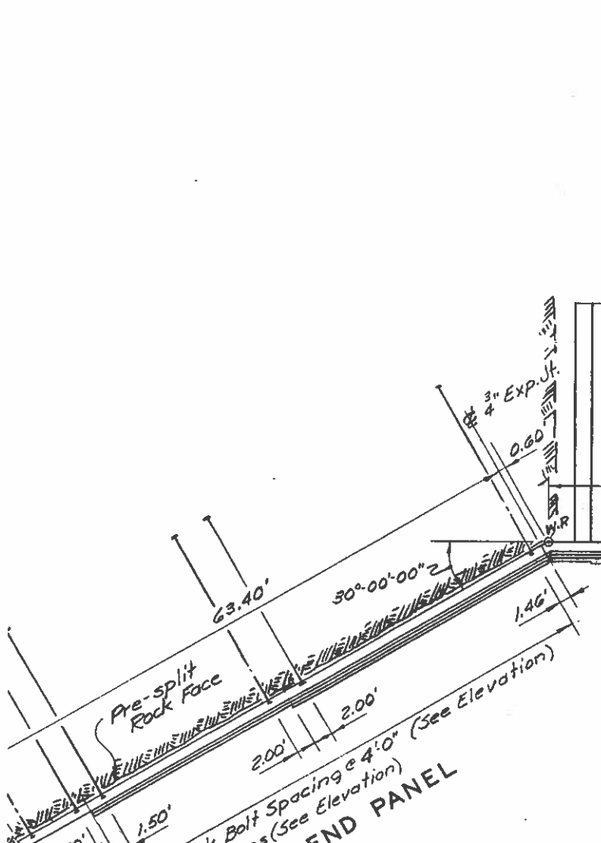

LEFT END PANEL

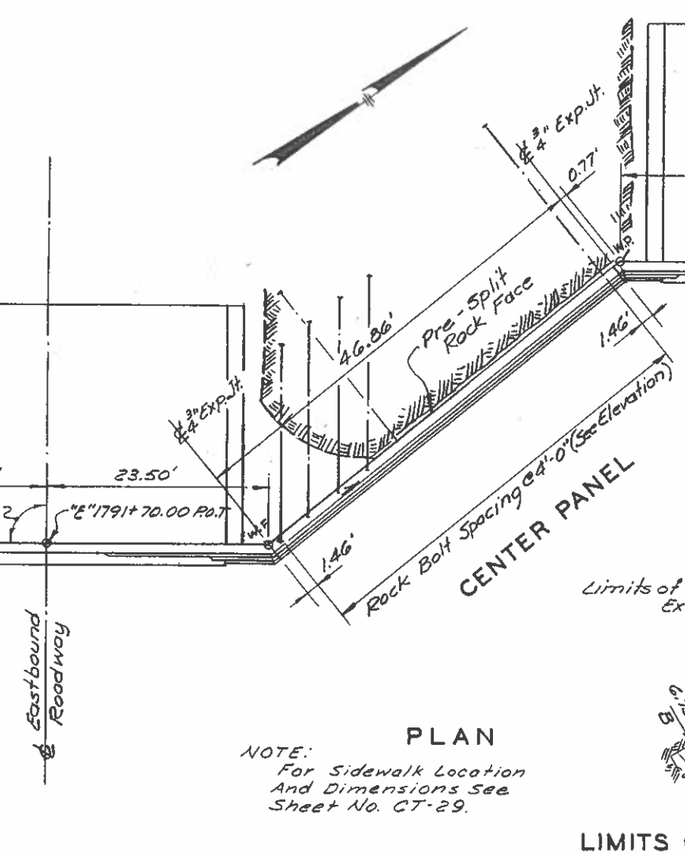

CENTER PANEL

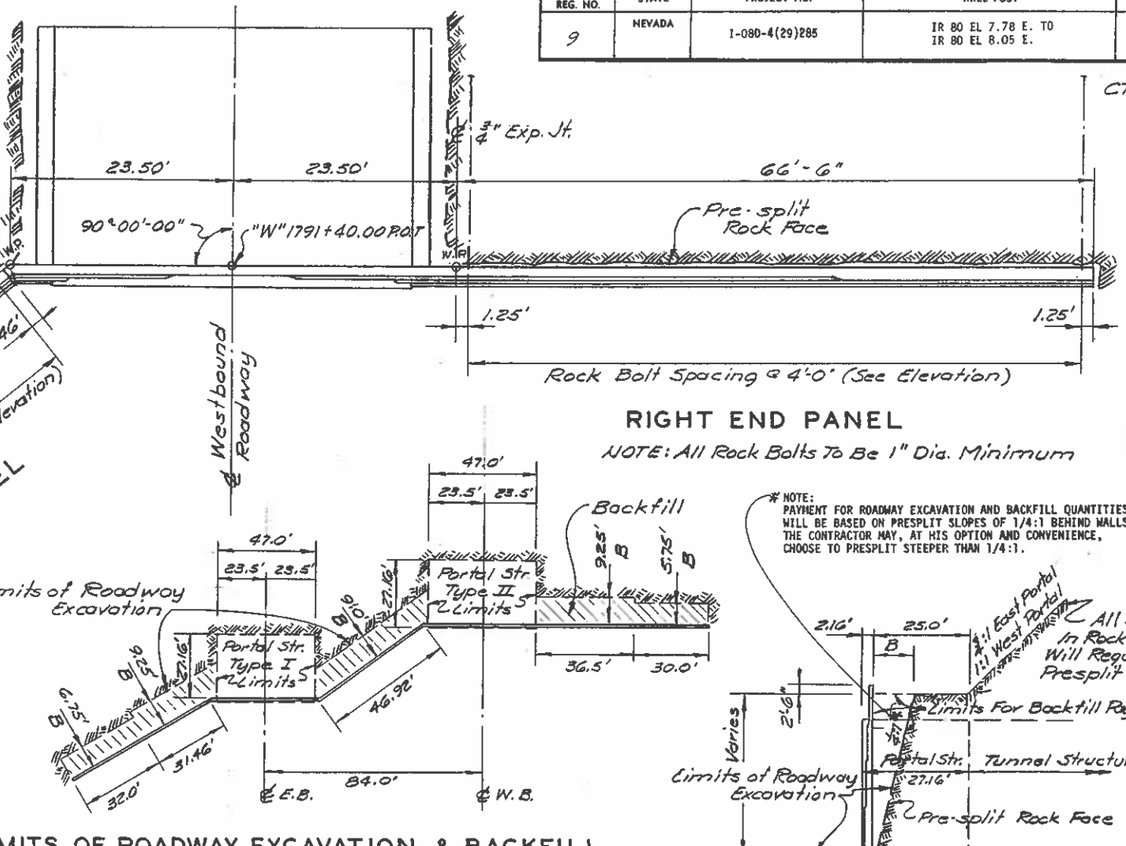

RIGHT END PANEL

NOTE: All Rock Bolts To Be 1" Dia. Minimum

NOTE: For Sidewalk Location And Dimensions See Sheet No. CT-29.

PLAN

LIMITS OF ROADWAY EXCAVATION & BACKFILL

* NOTE:
PAYMENT FOR ROADWAY EXCAVATION AND BACKFILL QUANTITIES WILL BE BASED ON PRESPLIT SLOPES OF 1/4:1 BEHIND WALLS. THE CONTRACTOR MAY, AT HIS OPTION AND CONVENIENCE, CHOOSE TO PRESPLIT STEEPER THAN 1/4:1.

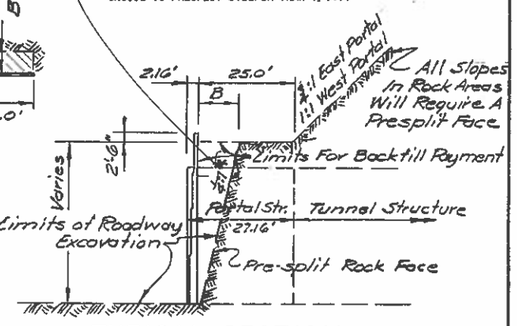

TYPICAL SECTION BOTH PORTALS

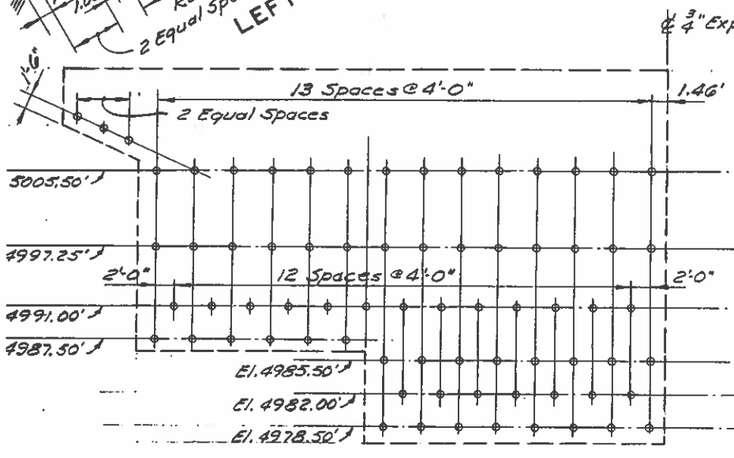

LEFT END PANEL

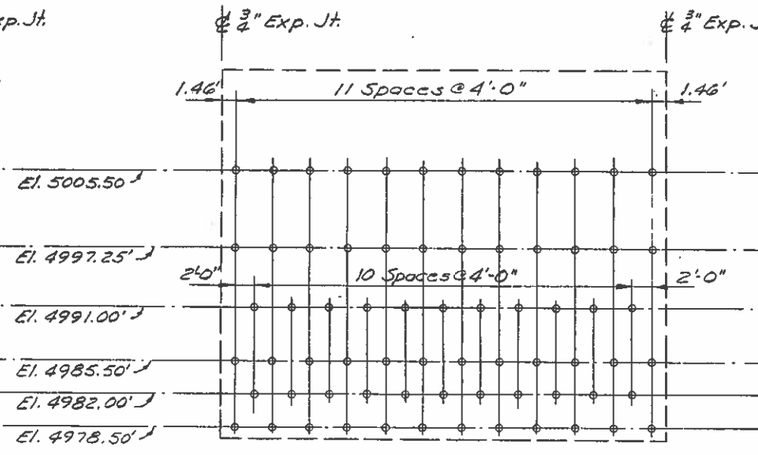

CENTER PANEL

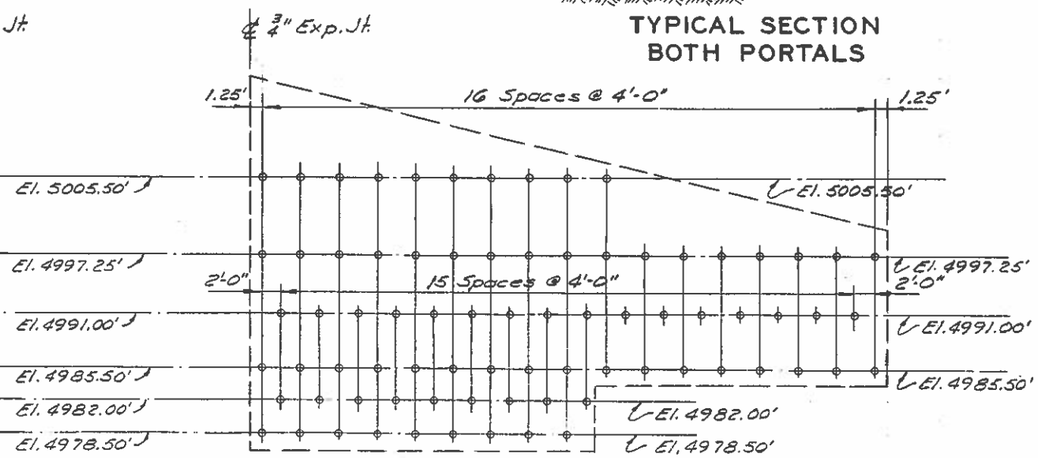

RIGHT END PANEL

ELEVATIONS - FULL FACE

STATE OF NEVADA
DEPARTMENT OF HIGHWAYS

IR80 - EL 7.92 E.

EAST PORTAL ROCK BOLT LAYOUT

FED RD REG NO	STATE	PROJECT NO	MILE POST	SHEET NO
9	NEVADA	I-080-1(29)285	1R 86 EL 7.78 E TO 1R 80 EL 8.05 E	B-39

CT-39.

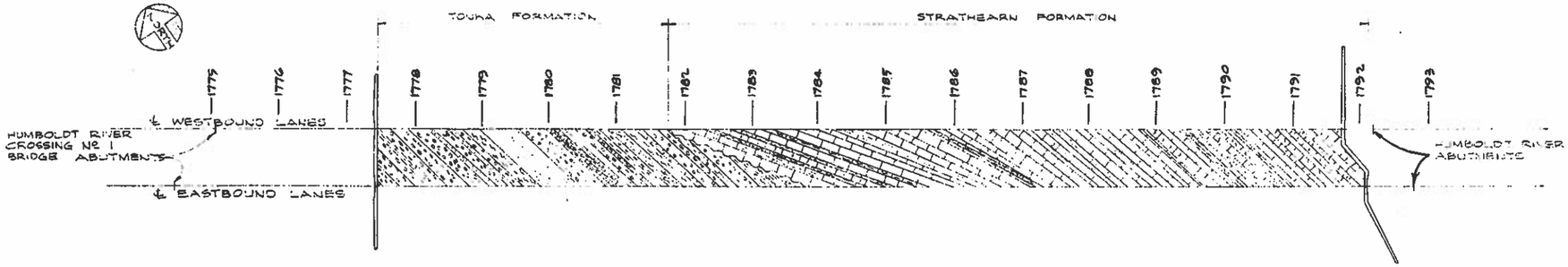

PLAN VIEW OF PROJECTED TUNNEL GEOLOGY

PORTAL TO PORTAL BETWEEN ℄s @ GRADE LEVEL
SCALE: 1"=100'

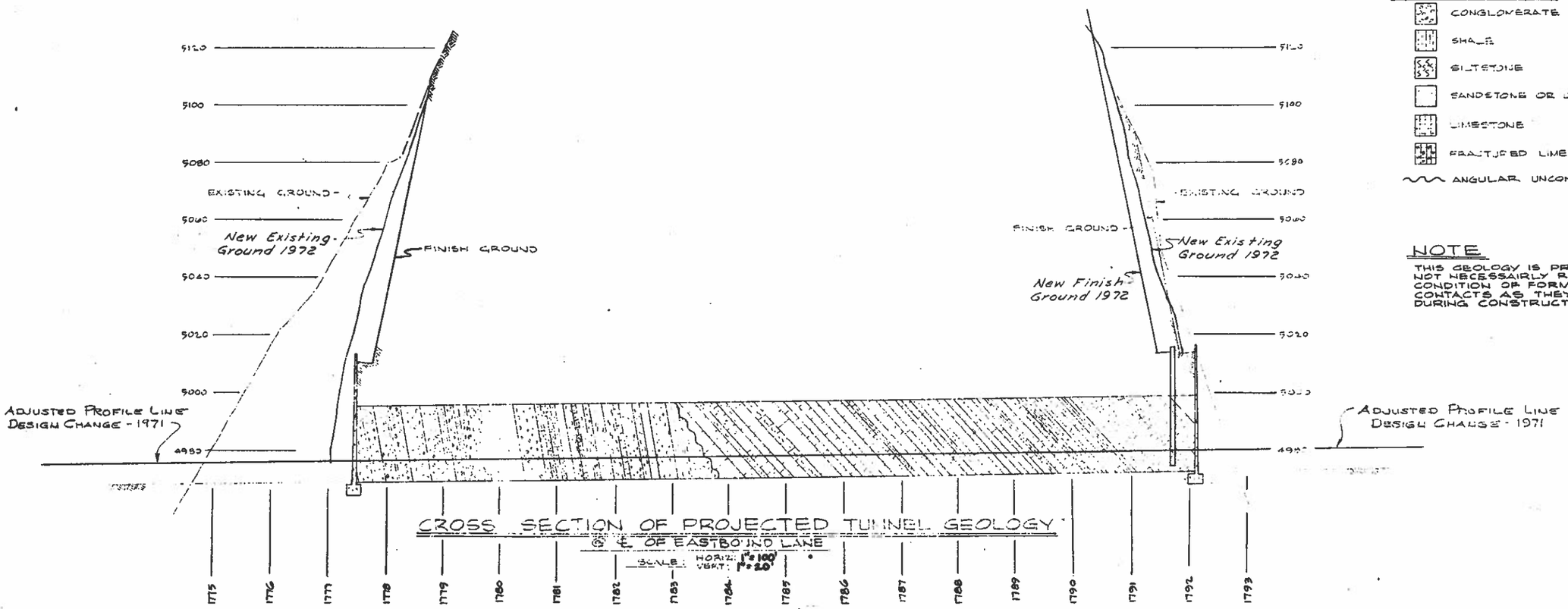

CROSS SECTION OF PROJECTED TUNNEL GEOLOGY

℄ OF EASTBOUND LANE
SCALE: HORIZ: 1"=100'
VERT: 1"=20'

LEGEND

- CONGLOMERATE
- SHALE
- SILTSTONE
- SANDSTONE OR QUARTZITE.
- LIMESTONE
- FRACTURED LIMESTONE
- ANGULAR UNCONFORMITY.

NOTE

THIS GEOLOGY IS PROJECTED AND DOES NOT NECESSARILY REPRESENT THE EXACT CONDITION OF FORMATIONS AND STRATA CONTACTS AS THEY WILL BE ENCOUNTERED DURING CONSTRUCTION

L.C.
T.C.
SEPT. 1964

REG. CIVIL ENG. NO. 1158
ENGINEERING GEOLOGIST

CLAIR A. HILL & ASSOCIATES
FOUNDATION ENGINEERING & TESTING LABORATORY
1525 COURT STREET REDDING, CALIFORNIA

GEOLOGIC CROSS SECTIONS
STATE OF NEVADA
CAPLIN CANYON TUNNELS

WO NCC-2005.19
G-2

FED. RD. REG. NO.	STATE	PROJECT NO.	MILE POST	SHEET NO.
9	NEVADA	I-080-4(29)285	IR 80 EL 7.78 E. TO IR 80 EL 8.05 E.	B-40

CT-40

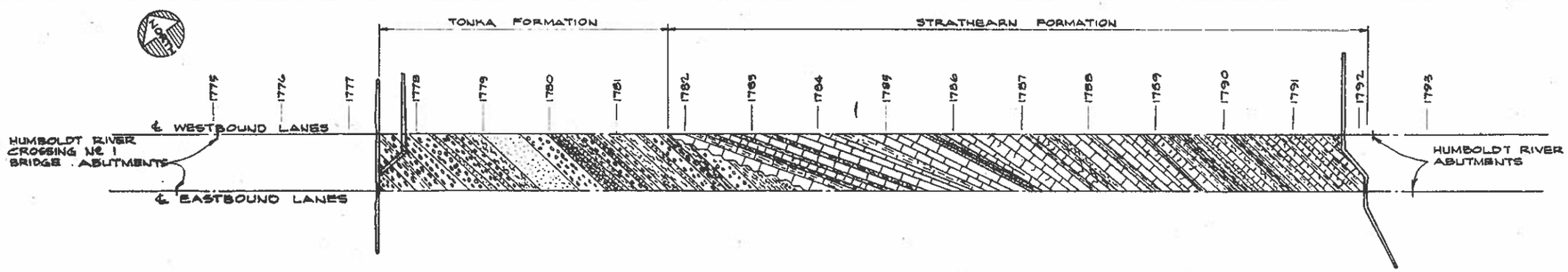

PLAN VIEW OF PROJECTED TUNNEL GEOLOGY

PORTAL TO PORTAL, BETWEEN ℄'s @ GRADE LEVEL

SCALE: 1"=100'

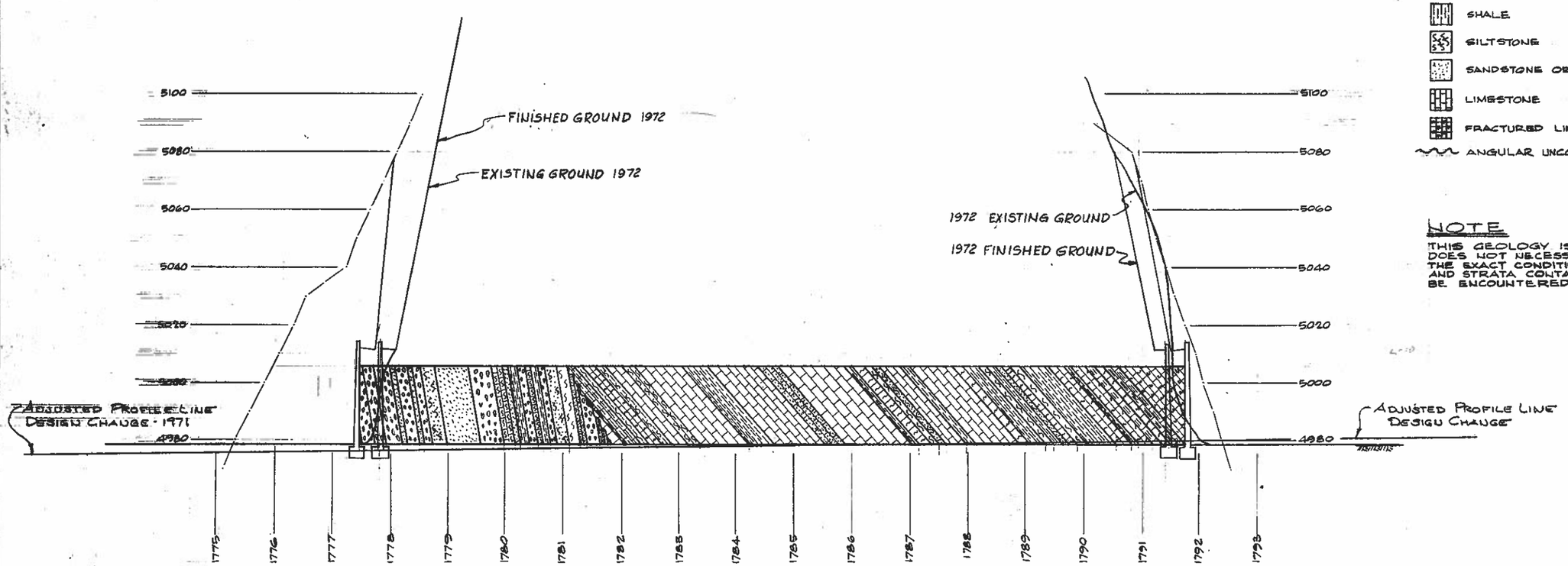

CROSS SECTION OF PROJECTED TUNNEL GEOLOGY

@ ℄ OF WESTBOUND LANE

SCALE: HORIZ. 1"=100'
VERT. 1"= 20'

LEGEND

- CONGLOMERATE
- SHALE
- SILTSTONE
- SANDSTONE OR QUARTZITE.
- LIMESTONE
- FRACTURED LIMESTONE
- ANGULAR UNCONFORMITY.

NOTE

THIS GEOLOGY IS PROJECTED, AND DOES NOT NECESSAIRLY REPRESENT THE EXACT CONDITION OF FORMATIONS AND STRATA CONTACTS AS THEY WILL BE ENCOUNTERED DURING CONSTRUCTION

DWN. ROHL	REG. CIVIL ENG. NO. 1158	CLAIR A. HILL & ASSOCIATES	GEOLOGIC CROSS SECTIONS
CHK T. C.	ENGINEERING GEOLOGIST	FOUNDATION ENGINEERING & TESTING LABORATORY	STATE OF NEVADA
DATE SEPT. 1964		1525 COURT STREET REDDING, CALIFORNIA	CARLIN CANYON TUNNELS
			DWG. 80-2005.19 G-3

B-41
CT-41

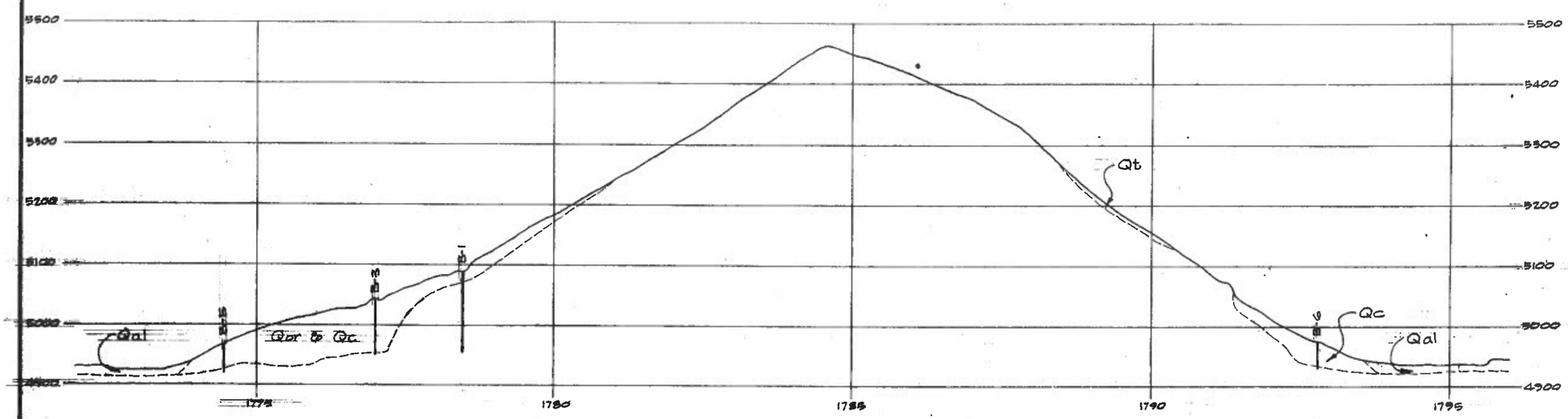

EASTBOUND LANE PROFILE

SCALE: 1" = 100' HORIZ. & VERT.

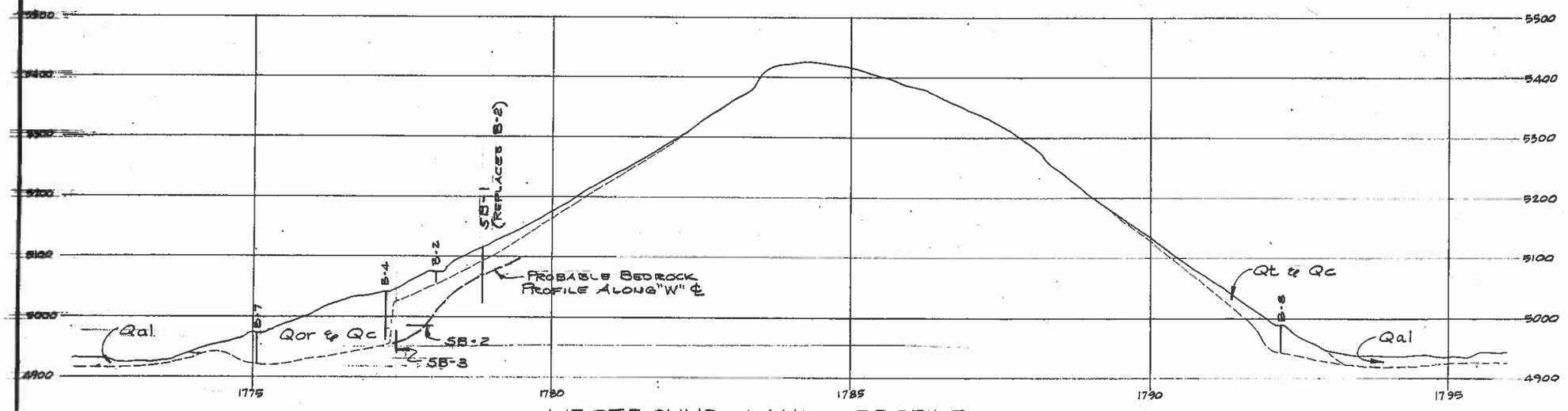

WESTBOUND LANE PROFILE

SCALE: 1"=100' HORIZ. & VERT.

* NOTE:
SB-2, & SB-3 DRILLED WITH AIRTRACK ROCK DRILL - NO SAMPLES WERE TAKEN. HOLES WERE DRILLED TO BEDROCK.

LEGEND

QUATERNARY

RECENT
- Qt — TALUS (LOOSE SURFICIAL ROCK FRAGMENTS).
- Qc — COLLUVIUM (TALUS, SOIL & LOCAL WASH).
- Qal — GEOLOGICALLY RECENT ALLUVIUM, INCLUDES SILT, SAND & GRAVEL DEPOSITED BY HUMBOLDT RIVER.

PLEISTOCENE
- Qor — OLDER RIVER DEPOSITED SAND & GRAVEL, INCLUDES SOME COLLUVIUM, SEMI-CEMENTED IN PLACES.

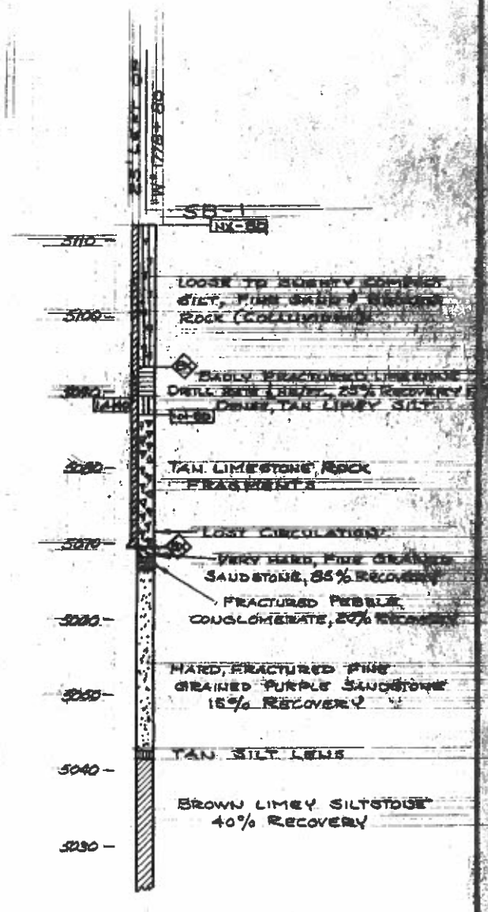

DWN. ROHL	Clair A. Hill REG. CIVIL ENG. NO. 1138	CLAIR A. HILL & ASSOCIATES
CHK. T. C.		FOUNDATION ENGINEERING & TESTING LABORATORY
DATE: SEPT. 1964	ENGINEERING GEOLOGIST	1525 COURT STREET REDDING, CALIFORNIA

SURFICIAL GEOLOGY CROSS-SECTIONS
STATE OF NEVADA
CARLIN CANYON TUNNELS

DWG. NO. 62006-19
G-4

CT-42 B-42

LEGEND

QUATERNARY	RECENT	Qt	TALUS (LOOSE SURFICIAL ROCK FRAGMENTS).
		Qc	COLLUVIUM (TALUS, SOIL & LOCAL WASH).
	PLEISTOCENE	Qor	OLDER RIVER DEPOSITED SAND & GRAVEL; INCLUDES SOME COLLUVIUM; SEMI-CEMENTED IN PLACES.
LOWER PERMIAN-UPPER PENNSYLVANIAN		IPPs	MEDIUM TO MASSIVE BEDDED LIMESTONE WITH INTER-BEDS OF CHERT-GRANULE AND PEBBLE CONGLOMERATE, SILTSTONE AND SHALE. STRATHERN FORMATION
LOWER PENNSYLVANIAN-UPPER MISSISSIPPIAN		Mt	CHERT-PEBBLE CONGLOMERATE WITH INTERBEDS OF SANDSTONE, QUARTZITE, CALCAREOUS SILTSTONE, ARGILLACEOUS LIMESTONE & SHALE. TONKA FORMATION

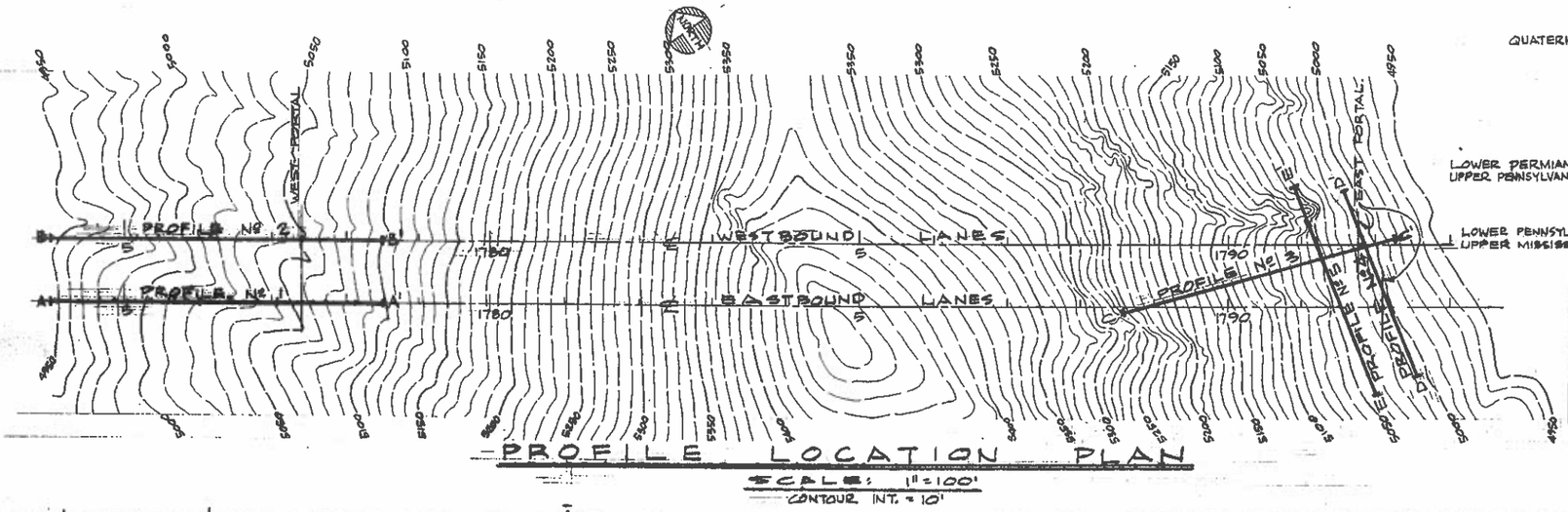

PROFILE LOCATION PLAN

SCALE: 1" = 100'
CONTOUR INT. = 10'

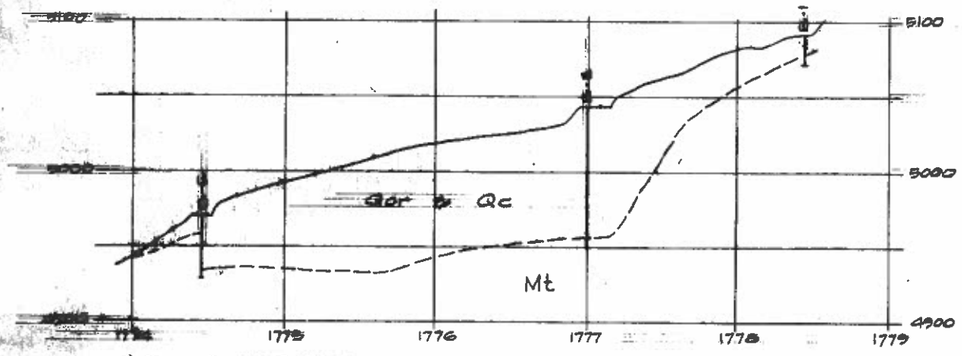

PROFILE Nº 1 - WEST PORTAL AREA - A-A'

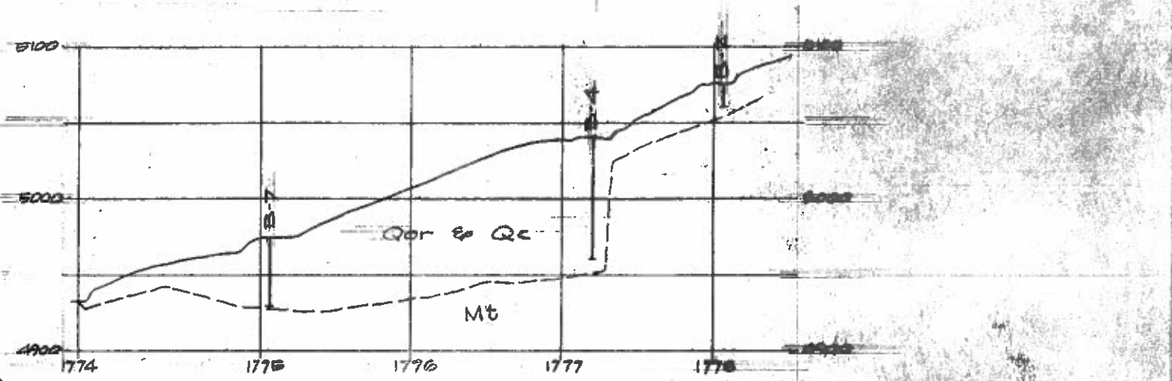

PROFILE Nº 2 - WEST PORTAL AREA - B-B'

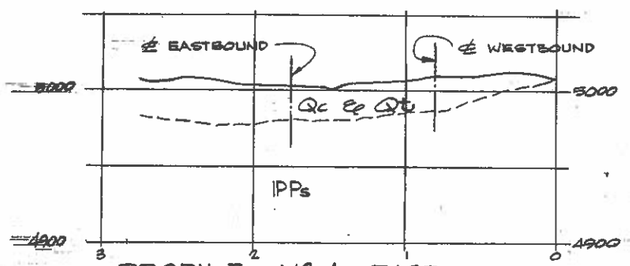

PROFILE Nº 4 - EAST PORTAL AREA - D-D'

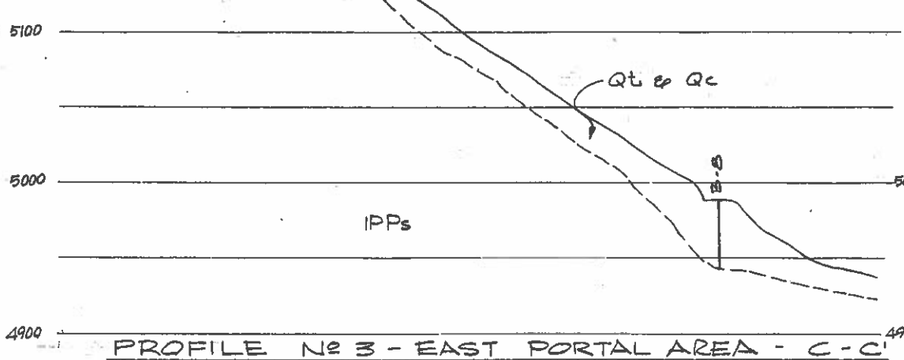

PROFILE Nº 3 - EAST PORTAL AREA - C-C'

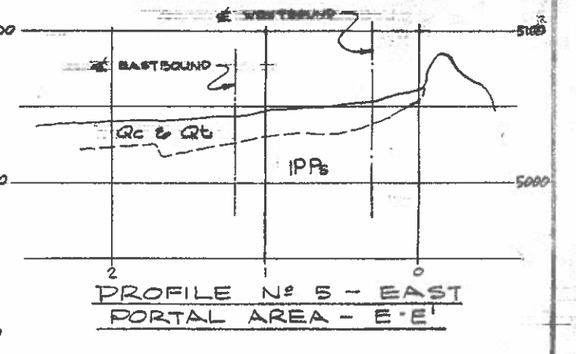

PROFILE Nº 5 - EAST PORTAL AREA - E-E'

GEOLOGICAL PROFILES

SCALES: HORIZ. & VERT. 1" = 50'

DWN. ROHL CHK. T. C. DATE: SEPT. 1964	REG. CIVIL ENG. NO. 1158 ENGINEERING GEOLOGIST	CLAIR A. HILL & ASSOCIATES FOUNDATION ENGINEERING & TESTING LABORATORY 1525 COURT STREET REDDING, CALIFORNIA	GEOLOGICAL PLAN & PROFILES STATE OF NEVADA CARLIN CANYON TUNNELS	DWG. NO. G-2005.19 G-5

FED. RD. REG. NO.	STATE	PROJECT NO.	MILE POST	SHEET NO.
9	NEVADA	I-080-4(29)285	IR 80 EL 7.78 E. TO IR 80 EL 8.05 E.	B-43

CT-43

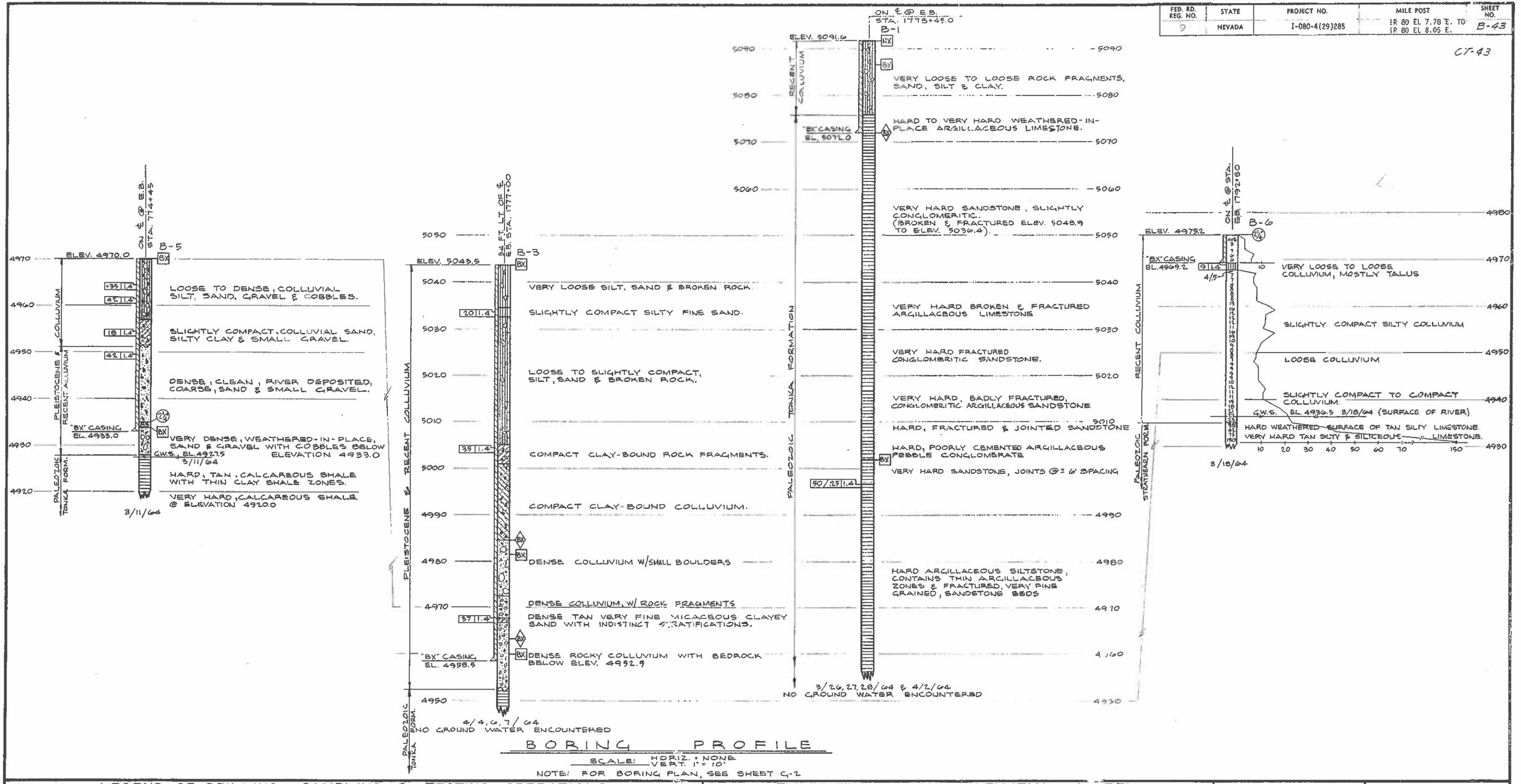

BORING PROFILE

SCALE: HORIZ. = NONE
VERT. 1" = 10'

NOTE: FOR BORING PLAN, SEE SHEET C-2

LEGEND OF DRILLING, SAMPLING & TESTING OPERATIONS

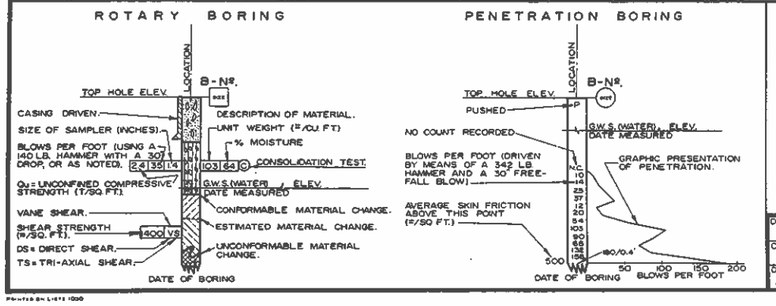

- PLAN OF ANY BORING
- PENETROMETER (FLUSH-COUPLED)
- 2 1/4" CONE PENETROMETER
- SAMPLER BORING (DRY)
- ROTARY BORING (WET)
- AUGER BORING (D.=)
- JET BORING
- DIAMOND CORE BORING.
- TEST PIT.

BIT SIZES; (O.D.) "AX" = 1 13/16", "BX" = 2 3/32", "NX" = 2 29/32".
CASING SIZES; (O.D.) "BX" = 2 7/8", "NX" = 3 1/2".

THE UNIFIED SOIL CLASSIFICATION SYSTEM

MAJ. DIV.		LETTER	SYMBOL	NAME
COARSE GRAINED MATERIAL	GRAVEL AND GRAVELLY SOIL	GW		WELL-GRADED GRAVEL OR GRAVEL-SAND MIXTURES, LITTLE OR NO FINES.
		GP		POORLY-GRADED GRAVEL OR GRAVEL-SAND MIXTURES, LITTLE OR NO FINES.
		GM		SILTY GRAVEL, GRAVEL-SAND-SILT MIXTURES.
		GC		CLAYEY GRAVEL, GRAVEL-SAND-CLAY MIXTURES.
	SAND AND SANDY SOIL	SW		WELL-GRADED SAND OR GRAVELLY SAND, LITTLE OR NO FINES
		SP		POORLY-GRADED SAND OR GRAVELLY SAND, LITTLE OR NO FINES
		SM		SILTY SAND, SAND-SILT MIXTURES.
		SC		CLAYEY SAND, SAND-SILT MIXTURES.
FINE GRAINED SOIL	SILTS AND CLAYS LL<50	ML		INORGANIC SILT AND VERY FINE SAND, ROCK FLOUR, SILTY OR CLAYEY FINE SAND OR CLAYEY SILT WITH SLIGHT PLASTICITY
		CL		INORGANIC CLAY OF LOW TO MEDIUM PLASTICITY, GRAVELLY CLAY, SANDY CLAY, SILTY CLAY, LEAN CLAY.
		OL		ORGANIC SILT AND ORGANIC SILT-CLAY OF LOW PLASTICITY.
	SILTS AND CLAYS LL>50	MH		INORGANIC SILT, MICACEOUS OR DIATOMACEOUS FINE SANDY OR SILTY SOILS, ELASTIC SILT
		CH		INORGANIC CLAY OF HIGH PLASTICITY, FAT CLAY.
		OH		ORGANIC CLAY OF MEDIUM TO HIGH PLASTICITY, ORGANIC SILT.
HIGHLY ORGANIC SOILS		PT		PEAT AND OTHER HIGHLY ORGANIC SOILS.

ROCK CLASSIFICATION

SYMBOL	NAME
	IGNEOUS ROCK
	SEDIMENTARY ROCK
	METAMORPHIC ROCK

NOTE: CLASSIFICATION OF EARTH MATERIAL SHOWN ON THIS SHEET IS BASED UPON FIELD INSPECTION UNLESS NOTED OTHERWISE.

SOIL CONSISTENCY CLASSIFICATION

CONSISTENCY		* BLOWS PER FT.
GRANULAR	COHESIVE	
VERY LOOSE	VERY SOFT	0 TO 5
LOOSE	SOFT	5 TO 10
SLIGHTLY COMPACT	STIFF	10 TO 20
COMPACT	VERY STIFF	20 TO 35
DENSE	HARD	35 TO 70
VERY DENSE	VERY HARD	70

* (STANDARD PENETRATION TEST) BLOWS PER FT. (140 LB. HAMMER, 30" FREE-FALL BLOW USING A 2" O.D. x 1 3/8" I.D. SAMPLER).

DWN. L.R.C.
CHK. C.H.
DATE: AUG. 1964

REG. CIVIL ENG. NO. 1136
ENGINEERING GEOLOGIST

CLAIR A. HILL & ASSOCIATES
FOUNDATION ENGINEERING & TESTING LABORATORY
1525 COURT STREET REDDING, CALIFORNIA

LOG OF TEST BORINGS
CARLIN CANYON TUNNEL
STATE OF NEVADA
CARSON CITY NEVADA

DWG. NO. G-2009-19
G-6

PRINTED ON L-KEE 1000

FED. RD. REG. NO.	STATE	PROJECT NO.	MILE POST	SHEET NO.
9	NEVADA	I-080-4(29)285	I.R. 80 EL 7.78 E. TO I.R. 80 EL 8.05 E.	B-44

CT-44

BORING PLAN

SCALE: 1" = 100'

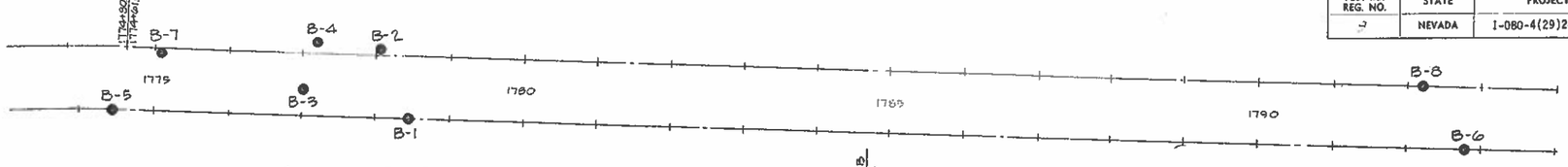

BORING PROFILE

SCALE: HORIZ. = NONE
VERT. 1" = 10'

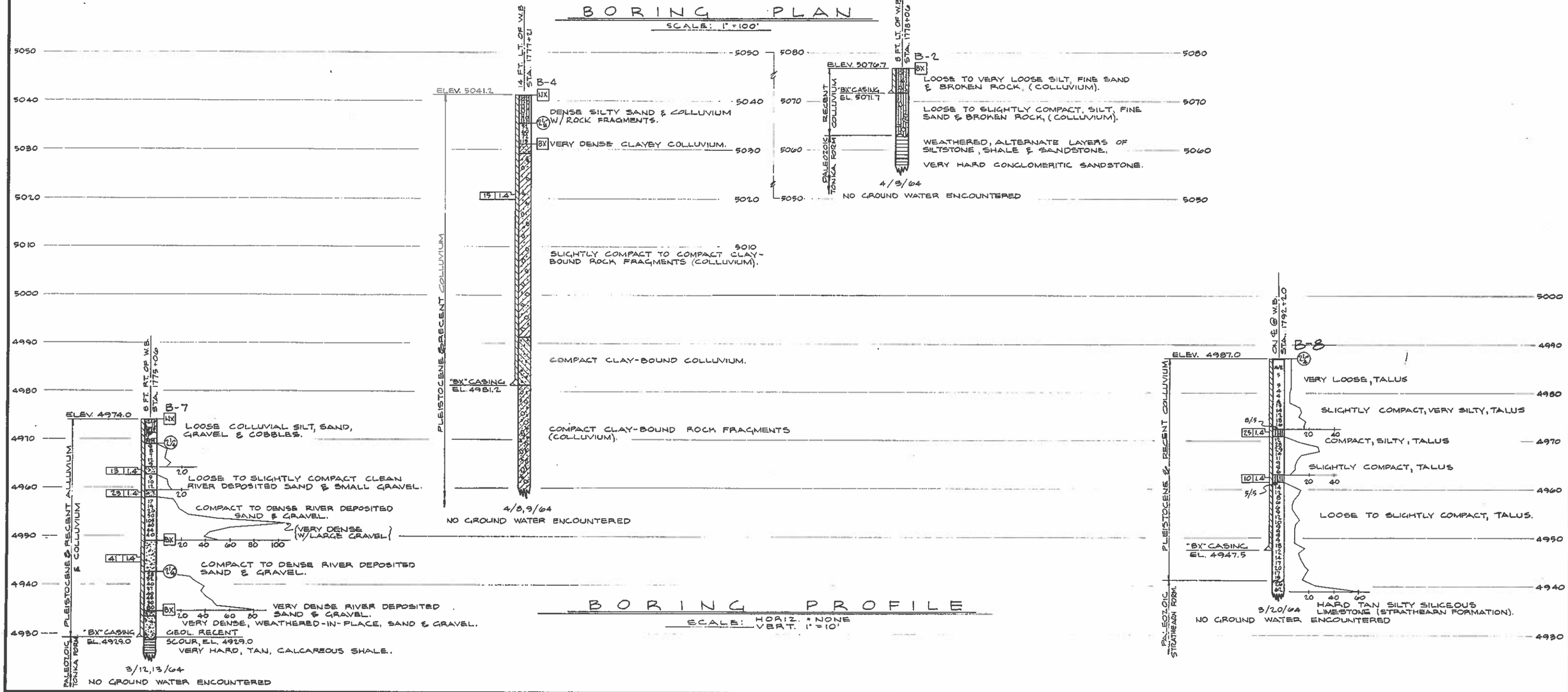

LEGEND OF DRILLING, SAMPLING & TESTING OPERATIONS

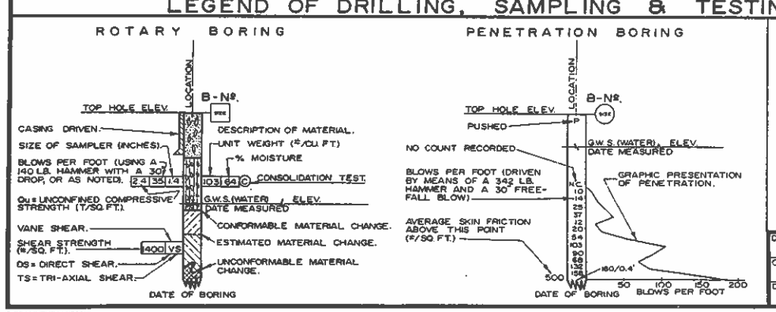

- PLAN OF ANY BORING
- PENETROMETER (FLUSH-COUPLED)
- 2 1/4" CONE PENETROMETER
- SAMPLER BORING (DRY)
- ROTARY BORING (WET)
- AUGER BORING (DRY)
- JET BORING
- DIAMOND CORE BORING.
- TEST PIT

BIT SIZES; (O.D.): "AX" = 1 13/16", "BX" = 2 3/32", "NX" = 2 29/32".
CASING SIZES; (O.D.) "BX" = 2 7/8", "NX" = 3 1/2".

THE UNIFIED SOIL CLASSIFICATION SYSTEM

MAJ. DIV.		LETTER	SYMBOL	NAME
COARSE GRAINED MATERIAL	GRAVEL AND GRAVELLY SOIL	GW		WELL-GRADED GRAVEL OR GRAVEL-SAND MIXTURES, LITTLE OR NO FINES.
		GP		POORLY-GRADED GRAVEL OR GRAVEL-SAND MIXTURES, LITTLE OR NO FINES.
		GM		SILTY GRAVEL, GRAVEL-SAND-SILT MIXTURES.
		GC		CLAYEY GRAVEL, GRAVEL-SAND-CLAY MIXTURES.
	SAND AND SANDY SOIL	SW		WELL-GRADED SAND OR GRAVELLY SAND, LITTLE OR NO FINES
		SP		POORLY-GRADED SAND OR GRAVELLY SAND, LITTLE OR NO FINES
		SM		SILTY SAND, SAND-SILT MIXTURES.
		SC		CLAYEY SAND, SAND-SILT MIXTURES.

MAJ. DIV.		LETTER	SYMBOL	NAME
FINE GRAINED SOIL	SILTS AND CLAYS LL 50	ML		INORGANIC SILT AND VERY FINE SAND, ROCK FLOUR, SILTY OR CLAYEY FINE SAND OR CLAYEY SILT WITH SLIGHT PLASTICITY
		CL		INORGANIC CLAY OF LOW TO MEDIUM PLASTICITY, GRAVELLY CLAY, SANDY CLAY, SILTY CLAY, LEAN CLAY.
		OL		ORGANIC SILT AND ORGANIC SILT-CLAY OF LOW PLASTICITY.
	SILTS AND CLAYS LL 50	MH		INORGANIC SILT, MICACEOUS OR DIATOMACEOUS FINE SANDY OR SILTY SOILS, ELASTIC SILT.
		CH		INORGANIC CLAY OF HIGH PLASTICITY, FAT CLAY.
		OH		ORGANIC CLAY OF MEDIUM TO HIGH PLASTICITY, ORGANIC SILT
HIGHLY ORGANIC SOILS		PT		PEAT AND OTHER HIGHLY ORGANIC SOILS

ROCK CLASSIFICATION

SYMBOL	NAME
	IGNEOUS ROCK
	SEDIMENTARY ROCK
	METAMORPHIC ROCK

NOTE: CLASSIFICATION OF EARTH MATERIAL SHOWN ON THIS SHEET IS BASED UPON FIELD INSPECTION UNLESS NOTED OTHERWISE.

SOIL CONSISTENCY CLASSIFICATION

CONSISTENCY		* BLOWS PER FT.
GRANULAR	COHESIVE	
VERY LOOSE	VERY SOFT	0 TO 5
LOOSE	SOFT	5 TO 10
SLIGHTLY COMPACT	STIFF	10 TO 20
COMPACT	VERY STIFF	20 TO 35
DENSE	HARD	35 TO 70
VERY DENSE	VERY HARD	70

* (STANDARD PENETRATION TEST) BLOWS PER FT. (140 LB HAMMER, 30" FREE-FALL BLOW USING A 2" O.D. x 1 3/8" I.D. SAMPLER).

DWN. L.R.C.
CHK. C.H
DATE: AUG. 1964

REG. CIVIL ENG. NO 11515
ENGINEERING GEOLOGIST

CLAIR A. HILL & ASSOCIATES
FOUNDATION ENGINEERING & TESTING LABORATORY
1525 COURT STREET REDDING, CALIFORNIA

LOG OF TEST BORINGS
CARLIN CANYON TUNNEL
STATE OF NEVADA
CARSON CITY NEVADA

DWG. NO. C-1005.19 G-7

Printed on Litt 1000

FED. ROAD REG. NO.	STATE	PROJECT NO.	COUNTY	CONTROL SECTION	STATE ROUTE	SHEET NO.	TOTAL SHEETS
I-80	NEVADA	I-080-4(25)285	ELKO	EL-081	1	B-49	

SC-19

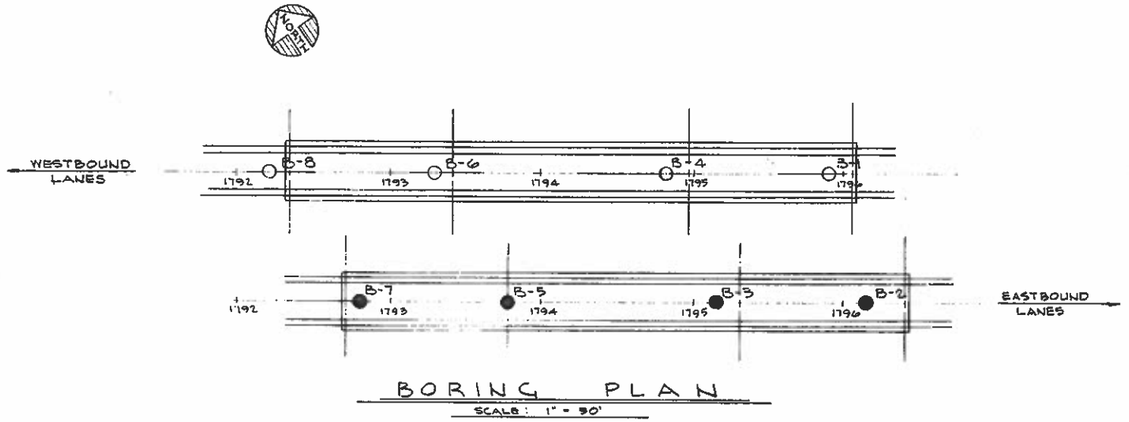

BORING PLAN

SCALE: 1" = 50'

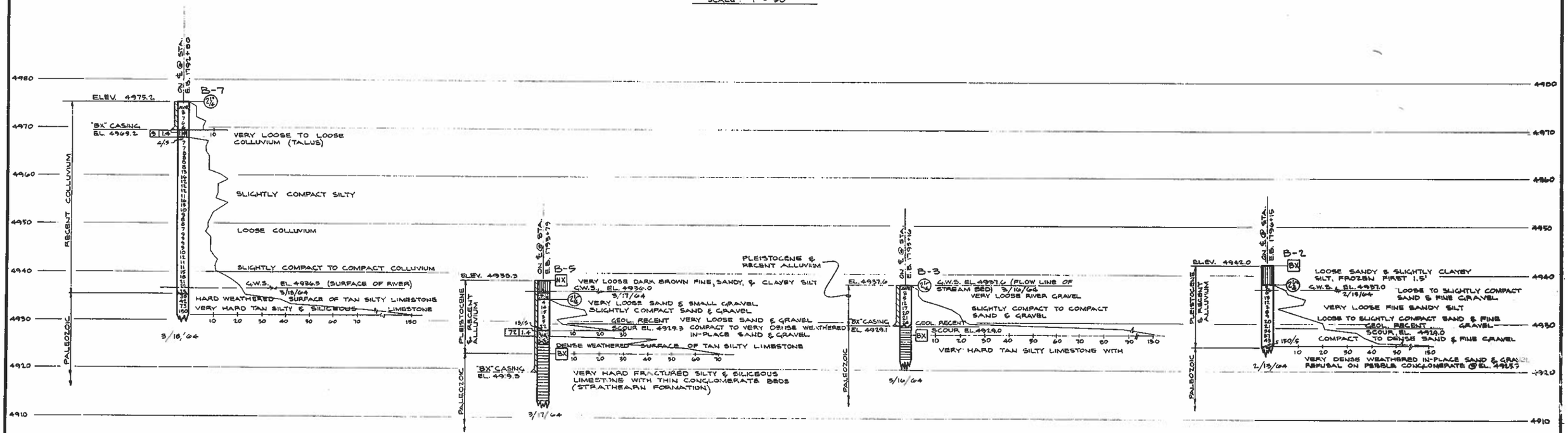

BORING PROFILE

SCALE: HORIZ. NONE
VERT. 1" = 10'

LEGEND OF DRILLING, SAMPLING & TESTING OPERATIONS

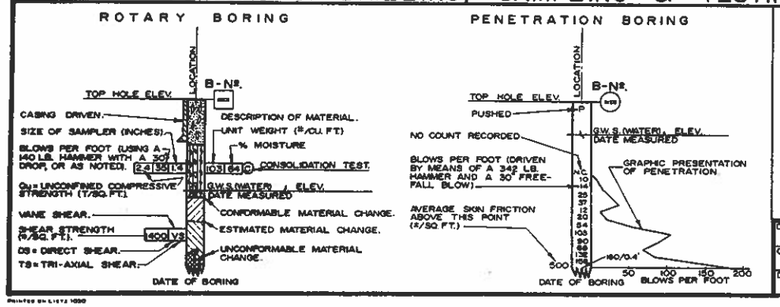

- PLAN OF ANY BORING
- PENETROMETER (PLUSH-COUPLED)
- 2 1/4" CONE PENETROMETER
- SAMPLER BORING (DRY)
- ROTARY BORING (WET)
- AUGER BORING (DRY)
- JET BORING
- DIAMOND CORE BORING.
- TEST PIT.

BIT SIZES; (O.D.) "AX" = 1 13/16", "BX" = 2 3/32", "NX" = 2 29/32".
CASING SIZES; (O.D.) "BX" = 2 7/8", "NX" = 3 1/2".

THE UNIFIED SOIL CLASSIFICATION SYSTEM

	MAJ. DIV.	LETTER	SYMBOL	NAME
COARSE GRAINED MATERIAL	GRAVEL AND GRAVELLY SOIL	GW		WELL-GRADED GRAVEL OR GRAVEL-SAND MIXTURES, LITTLE OR NO FINES.
		GP		POORLY-GRADED GRAVEL OR GRAVEL-SAND MIXTURES, LITTLE OR NO FINES.
		GM		SILTY GRAVEL, GRAVEL-SAND-SILT MIXTURES.
		GC		CLAYEY GRAVEL, GRAVEL-SAND-CLAY MIXTURES.
	SAND AND SANDY SOIL	SW		WELL-GRADED SAND OR GRAVELLY SAND, LITTLE OR NO FINES
		SP		POORLY-GRADED SAND OR GRAVELLY SAND, LITTLE OR NO FINES
		SM		SILTY SAND, SAND-SILT MIXTURES.
		SC		CLAYEY SAND, SAND-SILT MIXTURES.
FINE GRAINED SOIL	SILTS AND CLAYS LL<50	ML		INORGANIC SILT AND VERY FINE SAND, ROCK FLOUR, SILTY OR CLAYEY FINE SAND OR CLAYEY SILT WITH SLIGHT PLASTICITY
		CL		INORGANIC CLAY OF LOW TO MEDIUM PLASTICITY, GRAVELLY CLAY, SANDY CLAY, SILTY CLAY, LEAN CLAY.
		OL		ORGANIC SILT AND ORGANIC SILT-CLAY OF LOW PLASTICITY
	SILTS AND CLAYS LL>50	MH		INORGANIC SILT, MICACEOUS OR DIATOMACEOUS FINE SANDY OR SILTY SOILS, ELASTIC SILT
		CH		INORGANIC CLAY OF HIGH PLASTICITY, FAT CLAY.
		OH		ORGANIC CLAY OF MEDIUM TO HIGH PLASTICITY, ORGANIC SILT.
HIGHLY ORGANIC SOILS		PT		PEAT AND OTHER HIGHLY ORGANIC SOILS.

ROCK CLASSIFICATION

SYMBOL	NAME
	IGNEOUS ROCK
	SEDIMENTARY ROCK
	METAMORPHIC ROCK

NOTE: CLASSIFICATION OF EARTH MATERIAL SHOWN ON THIS SHEET IS BASED UPON FIELD INSPECTION UNLESS NOTED OTHERWISE.

SOIL CONSISTENCY CLASSIFICATION

CONSISTENCY		# BLOWS PER FT.
GRANULAR	COHESIVE	
VERY LOOSE	VERY SOFT	0 TO 5
LOOSE	SOFT	5 TO 10
SLIGHTLY COMPACT	STIFF	10 TO 20
COMPACT	VERY STIFF	20 TO 35
DENSE	HARD	35 TO 70
VERY DENSE	VERY HARD	70

* (STANDARD PENETRATION TEST) BLOWS PER FT. (140 LB. HAMMER, 30" FREE-FALL BLOW USING A 2" O.D. x 1 3/8" I.D. SAMPLER).

DWN. L. R. C.
CHK. C. H.
DATE: APRIL 1964

REG. CIVIL ENG. NO. 1138
ENGINEERING GEOLOGIST

CLAIR A. HILL & ASSOCIATES
FOUNDATION ENGINEERING & TESTING LABORATORY
1626 COURT STREET REDDING, CALIFORNIA

LOG OF TEST BORINGS
HUMBOLDT RIVER CROSSING NO. 2
STATE OF NEVADA
CARSON CITY NEVADA

DWG. NO. C-1005.17
G-4

PRINTED ON LIETZ 1000

FED. ROAD REG. NO.	STATE	PROJECT NO.	COUNTY	CONTROL SECTION	STATE ROUTE	SHEET NO.	TOTAL SHEETS
I-80	NEVADA	I-080-4(25)285	ELKO	EL-081	1	B-44	

SC-20

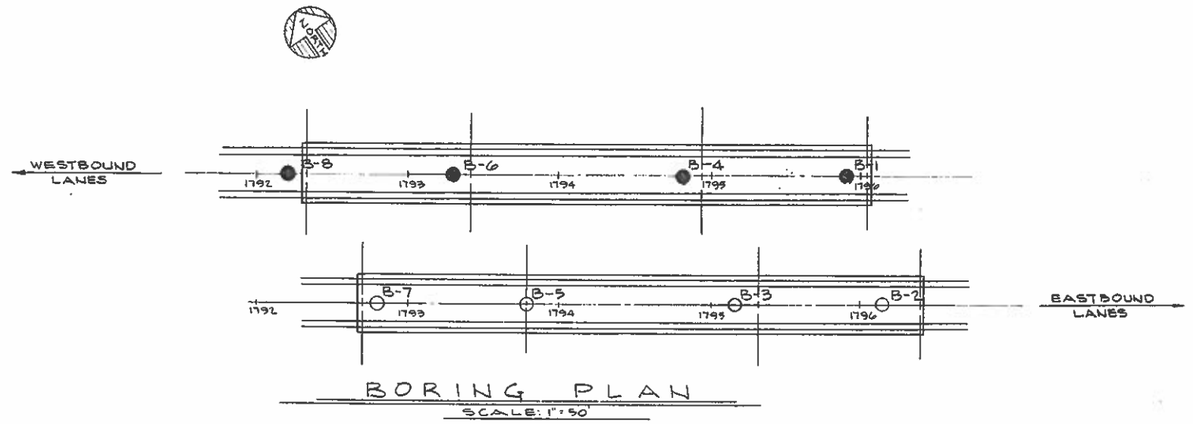

BORING PLAN

SCALE: 1" = 50'

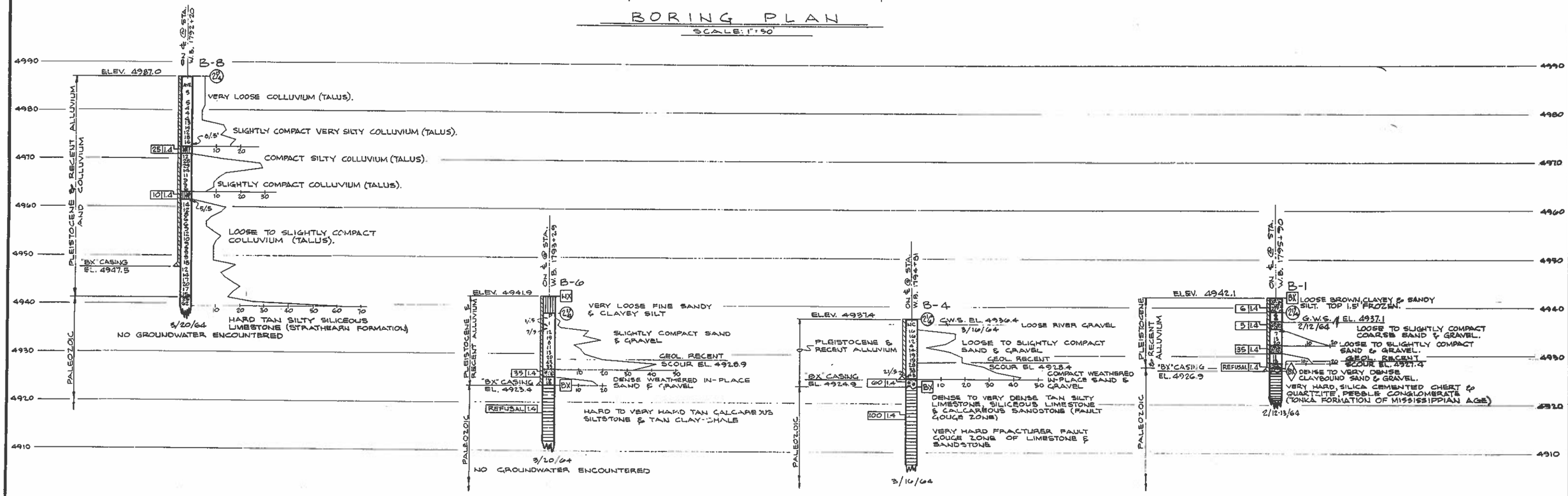

BORING PROFILE

SCALE: HORIZ. NONE
VERT. 1" = 10'

LEGEND OF DRILLING, SAMPLING & TESTING OPERATIONS

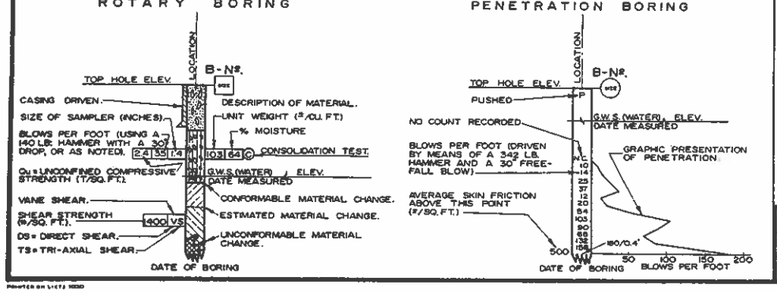

- PLAN OF ANY BORING
- PENETROMETER (FLUSH-COUPLED)
- 2 1/4" CONE PENETROMETER
- SAMPLER BORING (DRY)
- ROTARY BORING (WET)
- AUGER BORING (DRY)
- JET BORING
- DIAMOND CORE BORING.
- TEST PIT

BIT SIZES; (O.D.): "AX" = 1 13/16", "BX" = 2 9/32", "NX" = 2 29/32".
CASING SIZES; (O.D.): "BX" = 2 7/8", "NX" = 3 1/2".

THE UNIFIED SOIL CLASSIFICATION SYSTEM

MAJ. DIV.		LETTER	SYMBOL	NAME
COARSE GRAINED MATERIAL	GRAVEL AND GRAVELLY SOIL	GW		WELL-GRADED GRAVEL OR GRAVEL-SAND MIXTURES, LITTLE OR NO FINES.
		GP		POORLY-GRADED GRAVEL OR GRAVEL-SAND MIXTURES, LITTLE OR NO FINES.
		GM		SILTY GRAVEL, GRAVEL-SAND-SILT MIXTURES.
		GC		CLAYEY GRAVEL, GRAVEL-SAND-CLAY MIXTURES.
	SAND AND SANDY SOIL	SW		WELL-GRADED SAND OR GRAVELLY SAND, LITTLE OR NO FINES
		SP		POORLY-GRADED SAND OR GRAVELLY SAND, LITTLE OR NO FINES
		SM		SILTY SAND, SAND-SILT MIXTURES.
		SC		CLAYEY SAND, SAND-SILT MIXTURES.
FINE GRAINED SOIL	SILTS AND CLAYS LL≤50	ML		INORGANIC SILT AND VERY FINE SAND, ROCK FLOUR, SILTY OR CLAYEY FINE SAND OR CLAYEY SILT WITH SLIGHT PLASTICITY
		CL		INORGANIC CLAY OF LOW TO MEDIUM PLASTICITY, GRAVELLY CLAY, SANDY CLAY, SILTY CLAY, LEAN CLAY.
		OL		ORGANIC SILT AND ORGANIC SILT-CLAY OF LOW PLASTICITY
	SILTS AND CLAYS LL>50	MH		INORGANIC SILT, MICACEOUS OR DIATOMACEOUS FINE SANDY OR SILTY SOILS, ELASTIC SILT.
		CH		INORGANIC CLAY OF HIGH PLASTICITY, FAT CLAY.
		OH		ORGANIC CLAY OF MEDIUM TO HIGH PLASTICITY, ORGANIC SILT.
HIGHLY ORGANIC SOILS		PT		PEAT AND OTHER HIGHLY ORGANIC SOILS.

ROCK CLASSIFICATION

SYMBOL	NAME
	IGNEOUS ROCK
	SEDIMENTARY ROCK
	METAMORPHIC ROCK

NOTE: CLASSIFICATION OF EARTH MATERIAL SHOWN ON THIS SHEET IS BASED UPON FIELD INSPECTION UNLESS NOTED OTHERWISE.

SOIL CONSISTENCY CLASSIFICATION

CONSISTENCY		* BLOWS PER FT.
GRANULAR	COHESIVE	
VERY LOOSE	VERY SOFT	0 TO 5
LOOSE	SOFT	5 TO 10
SLIGHTLY COMPACT	STIFF	10 TO 20
COMPACT	VERY STIFF	20 TO 35
DENSE	HARD	35 TO 70
VERY DENSE	VERY HARD	70

* STANDARD PENETRATION TEST: BLOWS PER FT. (140 LB. HAMMER, 30" FREE-FALL BLOW USING A 2" O.D. x 1 3/8" I.D. SAMPLER).

DWN. L.D.R.
CHK. C.H
DATE: APRIL 1964

REG. CIVIL ENG. NO. 1136
ENGINEERING GEOLOGIST

CLAIR A. HILL & ASSOCIATES
FOUNDATION ENGINEERING & TESTING LABORATORY
1525 COURT STREET REDDING, CALIFORNIA

LOG OF TEST BORINGS
HUMBOLDT RIVER CROSSING No. 2
STATE OF NEVADA
CARSON CITY NEVADA

DWG. NO. C-1005.17
G-5

#1401

FED. ROAD REG. NO.	STATE	PROJECT NO.	COUNTY	CONTROL SECTION	STATE ROUTE	SHEET NO.	TOTAL SHEETS
7	NEVADA	I-080-4(26)286	ELKO	EL-081	1	B1	

TC-1

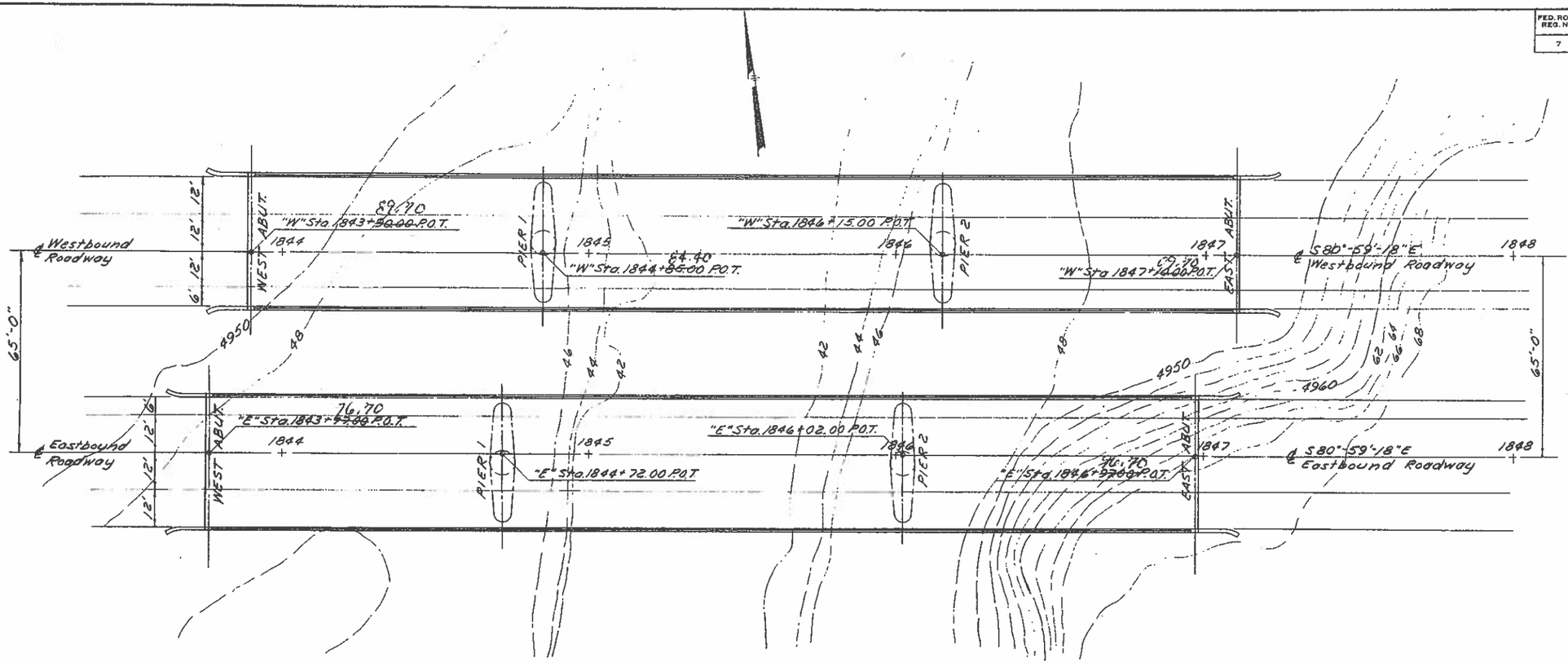

PLAN

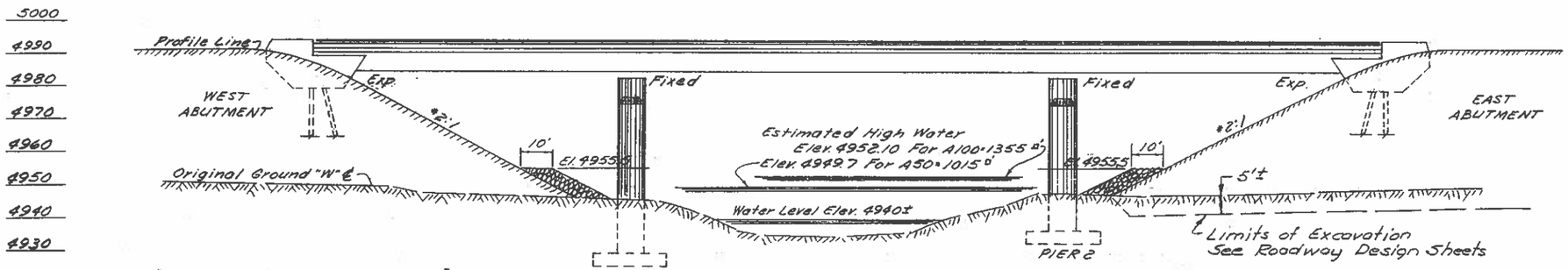

*2:1 Slopes Normal To Humboldt River

WESTBOUND ELEVATION

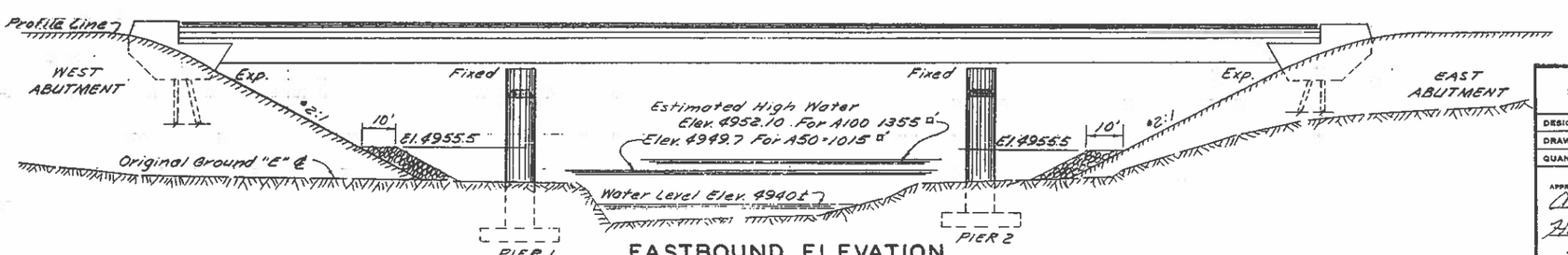

EASTBOUND ELEVATION

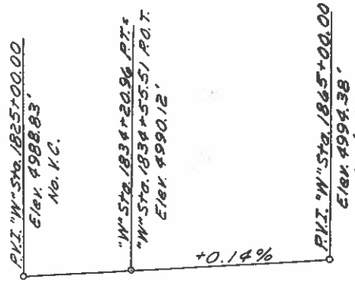

PROFILE LINE
WESTBOUND ROADWAY

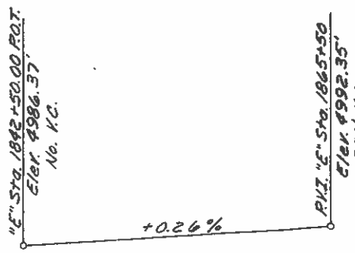

PROFILE LINE
EASTBOUND ROADWAY

STRUCTURAL DESIGN DIVISION				
DESIGN	BY: F.G.T.	√	BY: E.F.W.	
DRAWING	BY: B.A.B.	√	BY: F.I.M.	
QUANTITIES	BY: R.N.B.	√	BY: W.J.W.	

APPROVED:
Principal Bridge Engineer
Assistant Bridge Engineer
Bridge Engineer

STATE OF NEVADA
DEPARTMENT OF HIGHWAYS

B-1112E & B-1112W

CARLIN CANYON BRIDGES
3RD CROSSING

FED. ROAD REG. NO.	STATE	PROJECT NO.	COUNTY	CONTROL SECTION	STATE ROUTE	SHEET NO.	TOTAL SHEETS
7	NEVADA	I-180-4(16)286	ELKO	EL-081	1	82	

TC-2

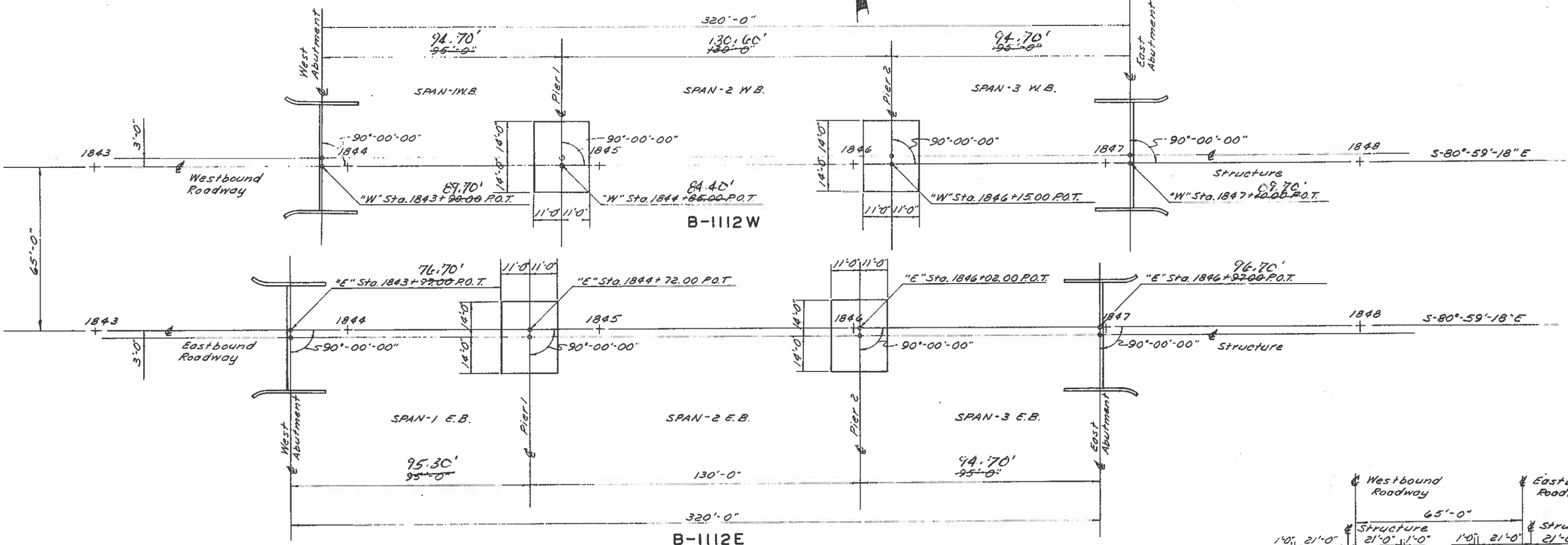

— GENERAL NOTES —

1. DESIGN SPECIFICATIONS: AASHO "STANDARD SPECIFICATIONS FOR HIGHWAY BRIDGES, 1969," AND "INTERIM SPECIFICATIONS THROUGH 1970."
2. CONSTRUCTION SPECIFICATIONS: STATE OF NEVADA DEPARTMENT OF HIGHWAYS "STANDARD SPECIFICATIONS FOR ROAD AND BRIDGE CONSTRUCTION, 1968," EXCEPT AS NOTED BELOW, AND IN THE SPECIAL PROVISIONS FOR THIS CONTRACT.
3. LIVE LOAD: STANDARD HS 20 - 44 OR ALTERNATE LOADING.
4. CONCRETE: ALL CONCRETE SHALL BE CLASS AA, MAJOR, EXCEPT DECK SECTION WHICH SHALL BE CLASS AA MODIFIED.
5. REINFORCING STEEL: ALL REINFORCING STEEL IS ASTM A615 GRADE 60. DIMENSIONS ARE TO CENTER OF BARS UNLESS OTHERWISE NOTED. BAR SIZES THREE (3) TO NINE (9) ARE INDICATED BY THE FIRST NUMBER IN THE MARK, TEN (10) OR LARGER BY THE FIRST TWO NUMBERS.
6. STRUCTURAL STEEL: ALL STRUCTURAL STEEL MEMBERS TO BE ASTM A36 STEEL UNLESS OTHERWISE NOTED.
7. CAMBER: THE CAMBER SHALL BE AS SHOWN ON THE PLANS.
8. PILING: ALL PILING TO BE HP 10 X 42 H PILES. MINIMUM BEARING VALUE IS 45 TONS PER PILE.
9. PILE DRIVING: THE ENGINEERING NEW FORMULA P=2E/(S+0.1) SHALL BE USED TO DETERMINE THE BEARING VALUE OF THE PILES EXCEPT WHERE LOAD TESTS ARE REQUIRED. TERMS P, E, AND S ARE DEFINED IN ARTICLE 508.03.05 OF THE CONSTRUCTION SPECIFICATIONS.
10. SPREAD FOOTINGS: MAXIMUM BEARING VALUE FOR PIER FOOTING IS TEN (10) TONS PER SQUARE FOOT. THE BOTTOM OF ALL FOOTINGS SHALL EXTEND TO A DEPTH OF A MINIMUM OF TWO (2) FEET BELOW THE BEDROCK LIMIT LINES OF THE FOOTING BLOCK THROUGHOUT THE BEDROCK EXCAVATION DEPTH, AND FOOTING BLOCKS SHOULD BE POURED NEAT AGAINST THE ROCK. ANY INCREASE THERE IS IN QUANTITIES FROM PROVIDING THE TWO FOOT MINIMUM DEPTH INTO THE BEDROCK SHALL BE PAID FOR AT CONTRACT UNIT PRICES.
11. BRIDGE RAILING: TO BE BRIDGE RAIL TYPE "H".
12. FINE SURFACE FINISH: SURFACES REQUIRING A FINE FINISH ARE DESIGNATED ON THE PLANS BY THE ABBREVIATION "FSF."
13. CONSTRUCTION TYPE CODE: X071.

— QUANTITIES —

ITEM	UNIT	B-1112E	B-1112W
STRUCTURE EXCAVATION	CU. YD.	1044.0	1188.0
BACKFILL	CU. YD.	714.0	848.0
CLASS AA CONCRETE (MAJOR)	CU. YD.	609.1	634.5
STEEL REINFORCED ELASTOMERIC EXPANSION JT. SEAL 2" MOVEMENT	LIN. FT.	86.25	86.25
REINFORCING STEEL	LBS.	245,141.3	250,553.6
STRUCTURAL STEEL	LBS.	358,385.0	358,385.0
BRIDGE RAIL TYPE "H"	LIN. FT.	641.3	641.3
FURNISH STEEL PILES	LIN. FT.	1548.0	1810.0
DRIVE STEEL PILES	EACH	32.0	32.0
SPLICES	EACH	16.0	16.0
CLASS AA CONCRETE (MOD.)	C.Y.	490.5	490.5

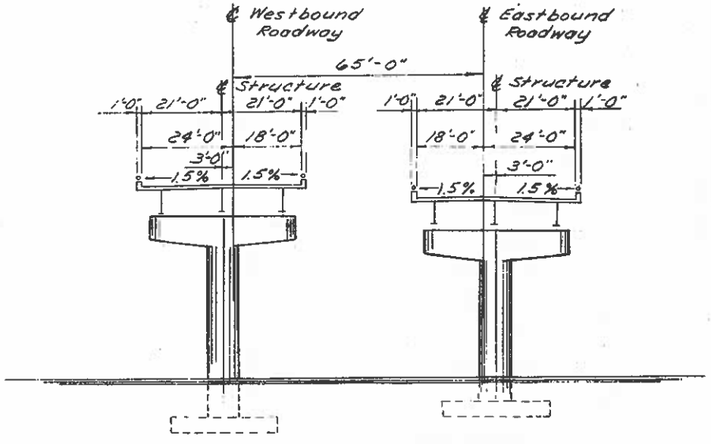

SECTION NORMAL TO I-80

STATE OF NEVADA
DEPARTMENT OF HIGHWAYS

B-1112E & B-1112W

STRUCTURE GEOMETRICS AND GENERAL NOTES

FED. ROAD REG. NO.	STATE	PROJECT NO.	COUNTY	CONTROL SECTION	STATE ROUTE	SHEET NO.	TOTAL SHEETS
7	NEVADA	F-060-4(16)286	ELKO	EL-081	1	B3	

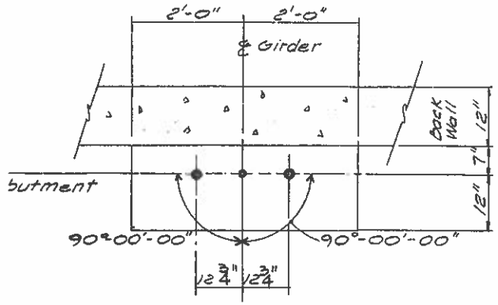

ANCHOR BOLT LAYOUT

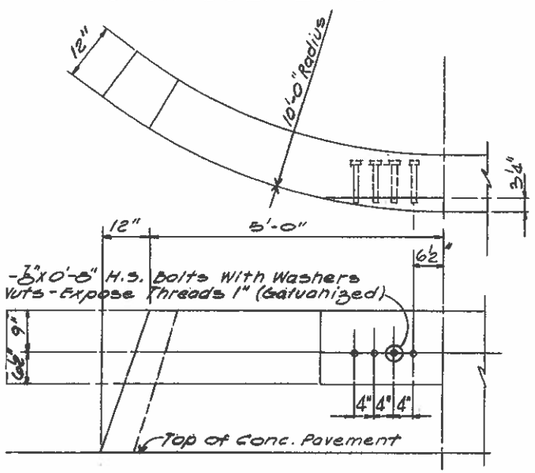

GUARD RAIL ATTACHMENT

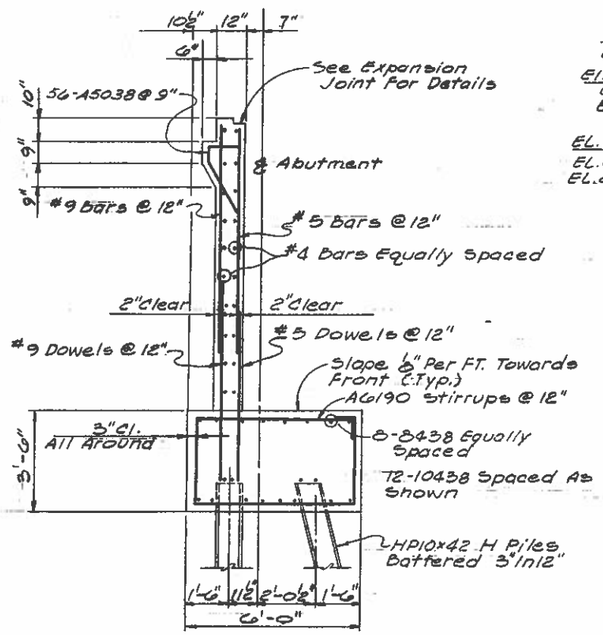

TYPICAL SECTION

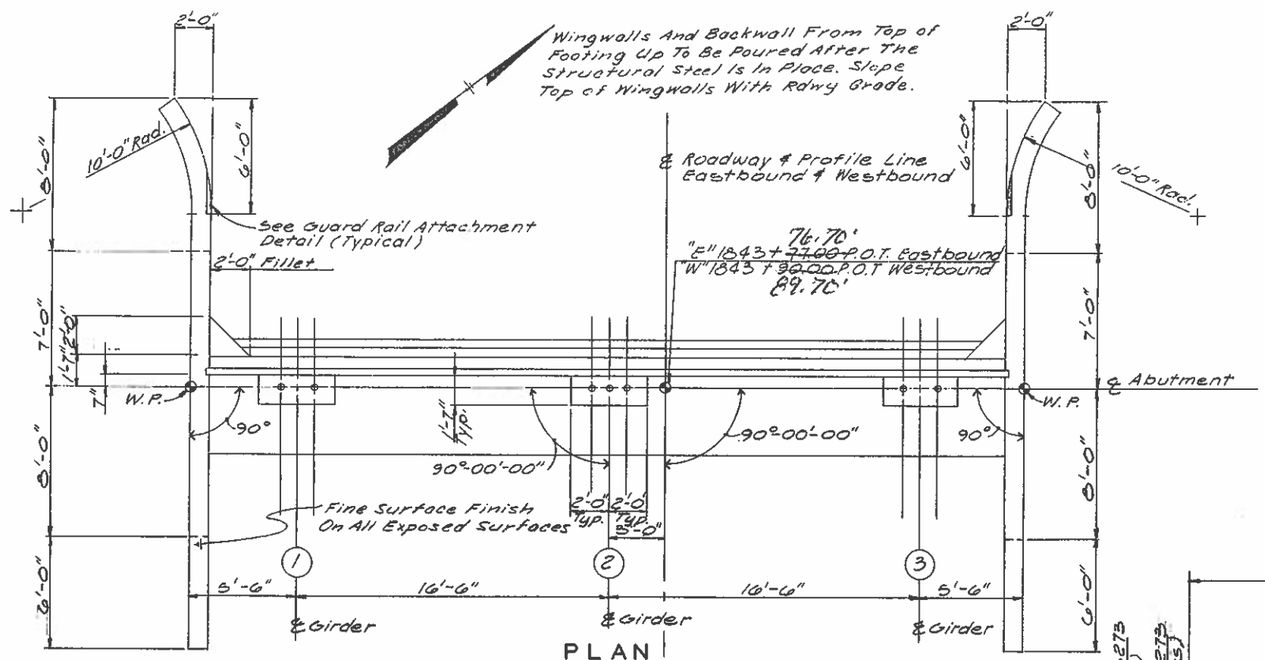

PLAN
(Westbound Abutment Opposite Hand)

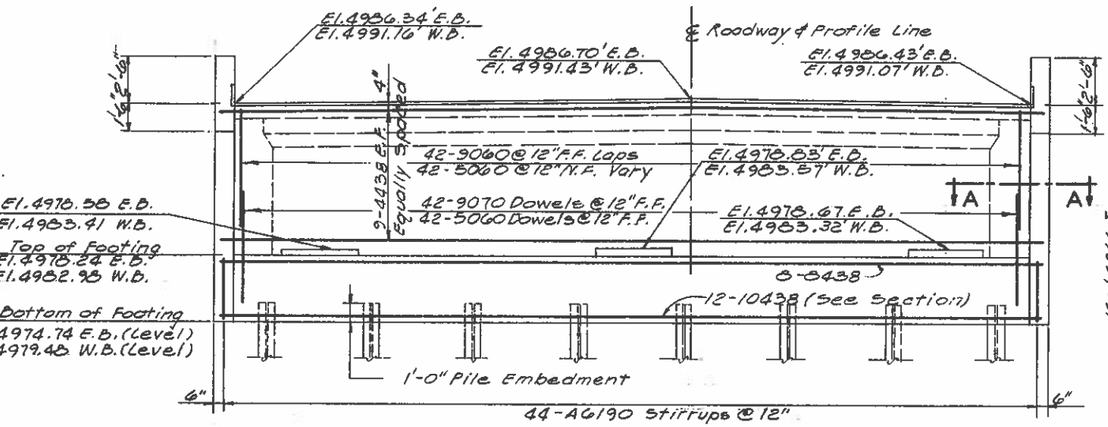

ELEVATION
(Westbound Abutment Opposite Hand)

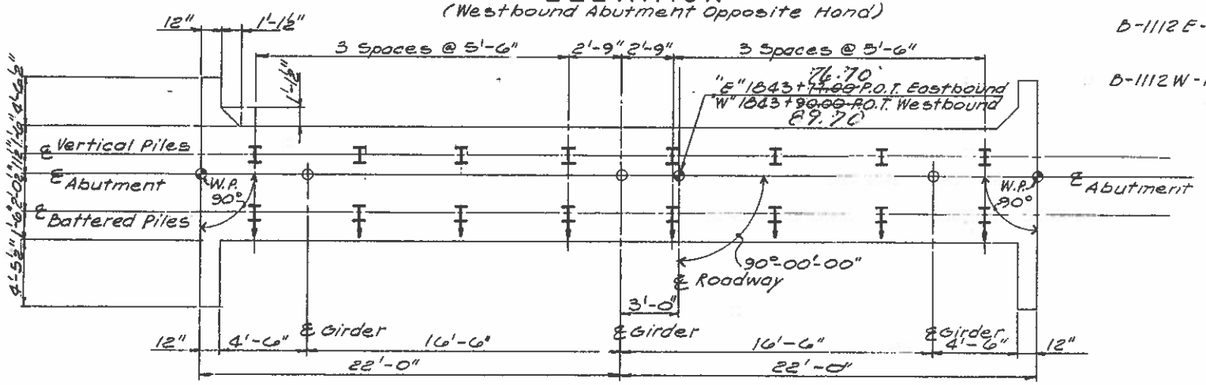

PILE PLAN
(Westbound Abutment Opposite Hand)

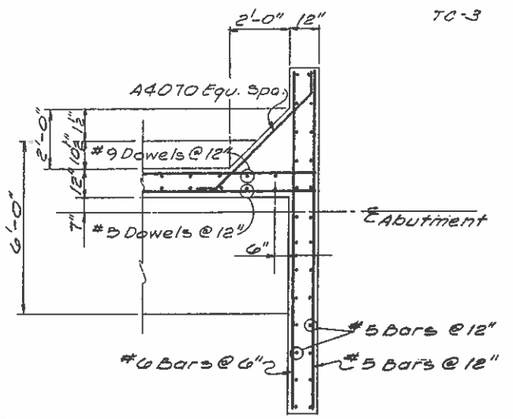

SECTION A-A

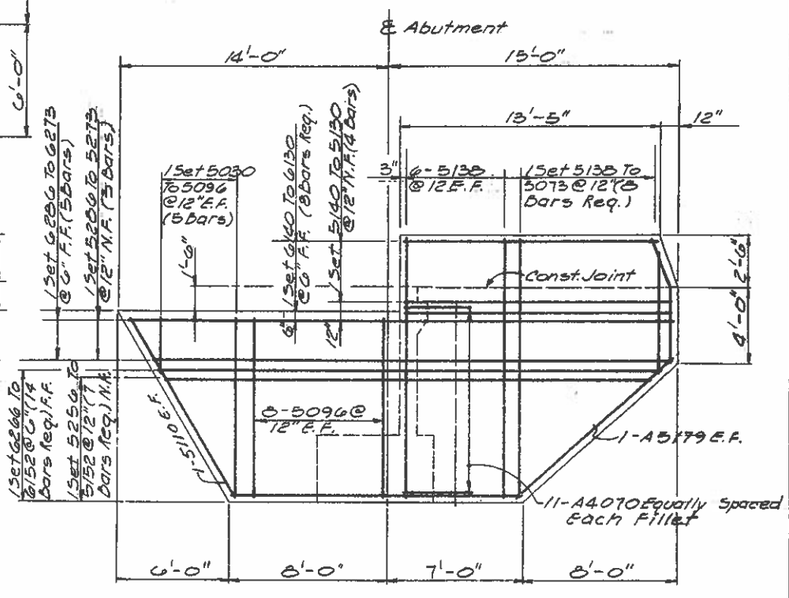

WINGWALL REINFORCING

B-1112 E - Minimum Pile Tip Penetration Elev. 4930.0'
Design Pile Tip Penetration Elev. 4920.0'

B-1112 W - Minimum Pile Tip Penetration Elev. 4925.0'
Design Pile Tip Penetration Elev. 4915.0'

Elev. 4924.0' For B1112 E, and Elev. 4920.0' For B1112 W Used For Furnished Steel Pile Estimates.
45 Tons Per Pile, Both Abutments.

See Sheet TC-11 For Pile Details

STATE OF NEVADA
DEPARTMENT OF HIGHWAYS

B-1112 E & B-1112 W

WEST ABUTMENT DETAILS AND REINFORCING

FED. ROAD REG. NO.	STATE	PROJECT NO.	COUNTY	CONTROL SECTION	STATE ROUTE	SHEET NO.	TOTAL SHEETS
7	NEVADA	F-030-4(226)236	ELKO	EL-081	1	84	

TC-4

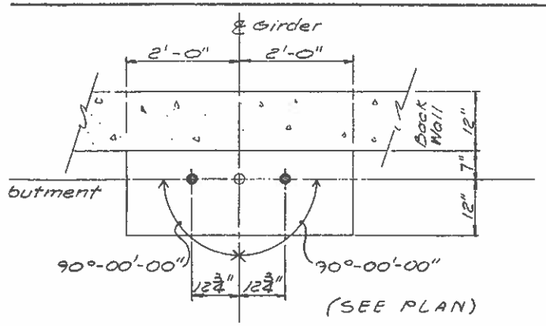

ANCHOR BOLT LAYOUT

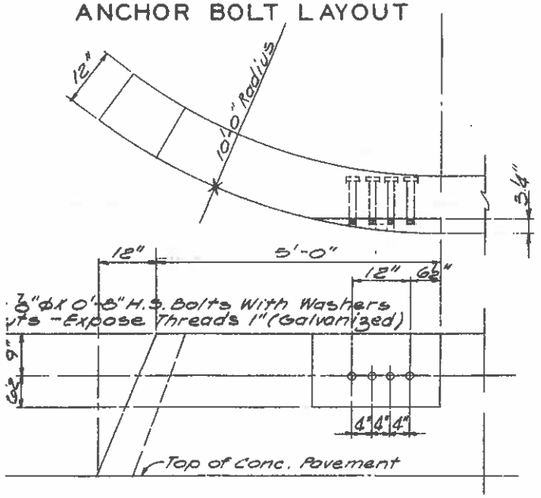

GUARD RAIL ATTACHMENT

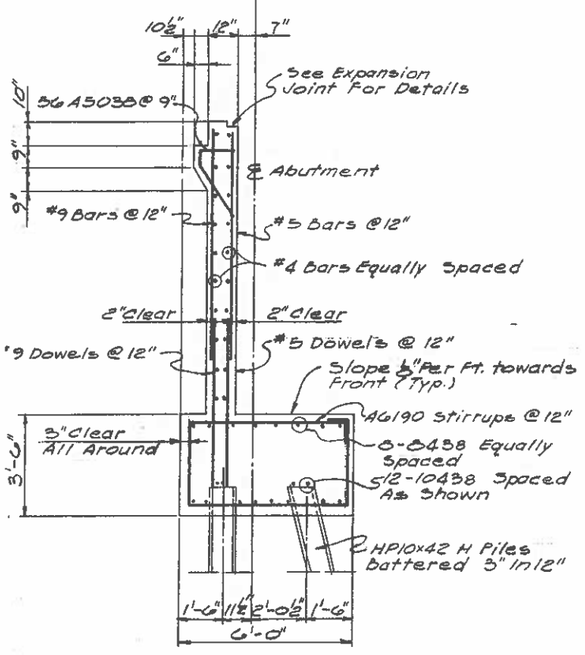

TYPICAL SECTION

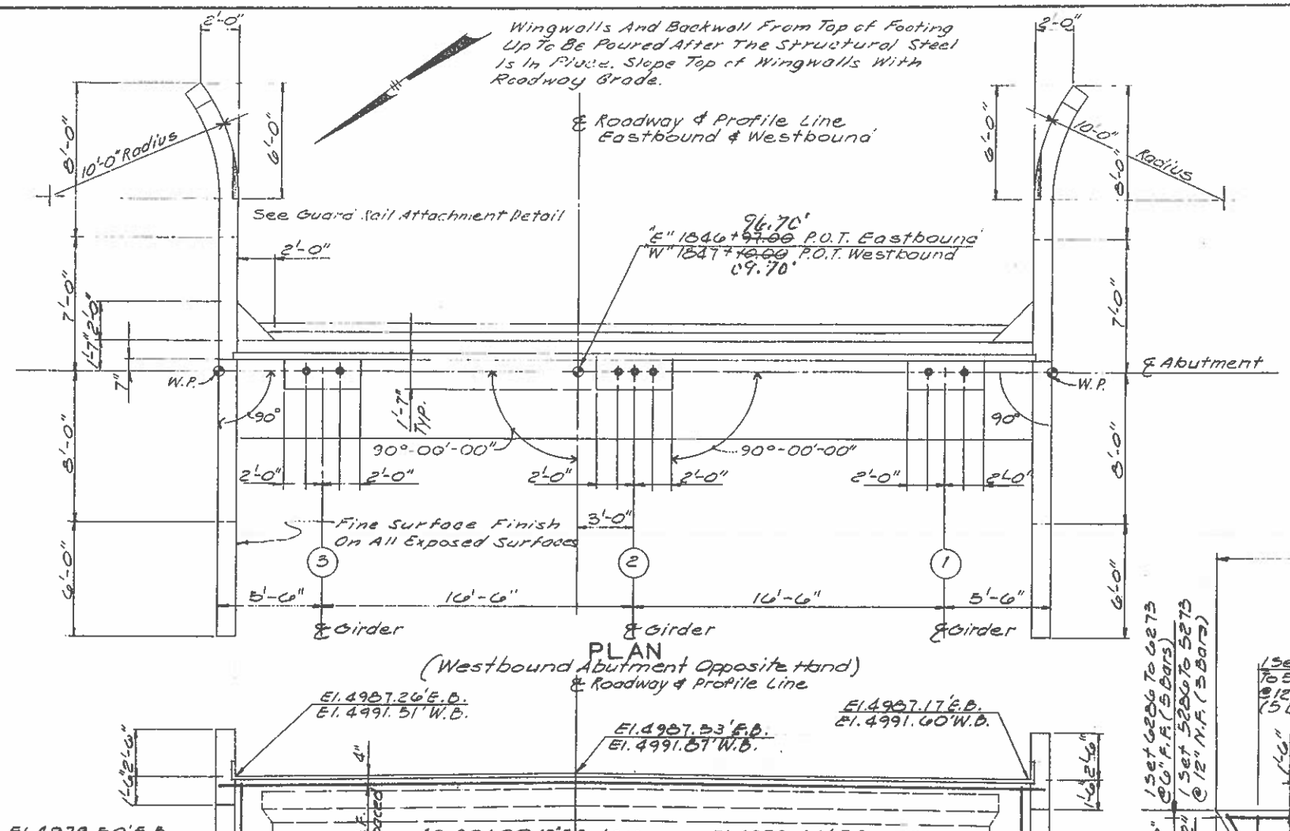

PLAN
(Westbound Abutment Opposite Hand)

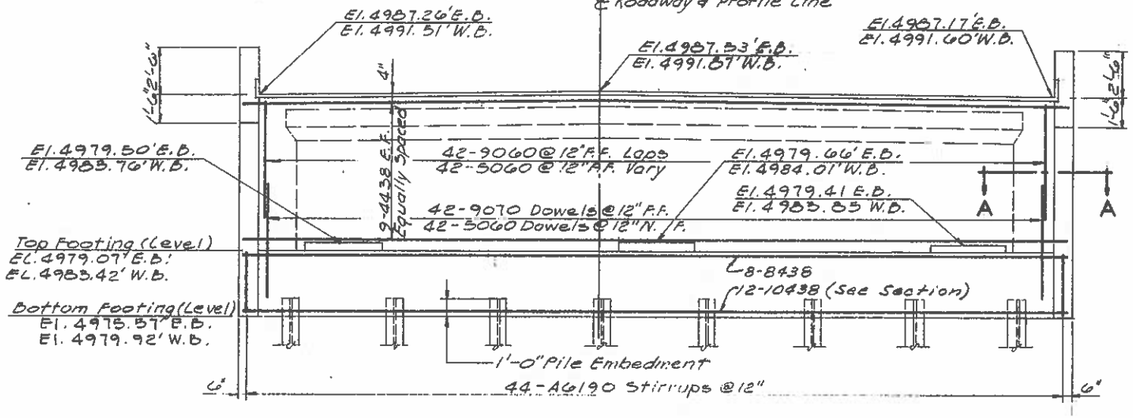

ELEVATION
(Westbound Abutment Opposite Hand)

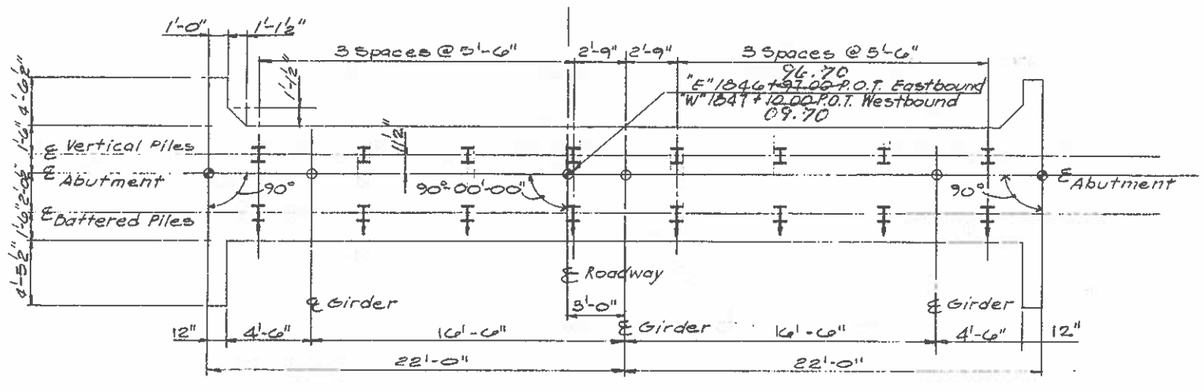

PILE PLAN
(Westbound Abutment Opposite Hand)

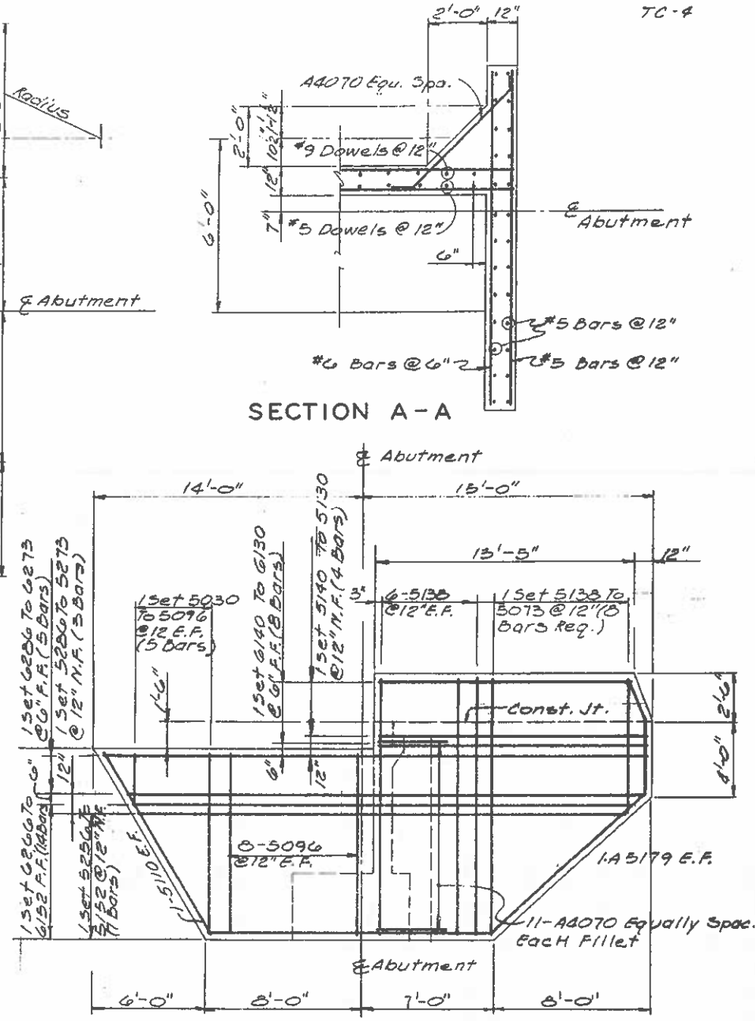

SECTION A-A

WINGWALL REINFORCING

B-1112 E. - Minimum Pile Tip Penetration Elev. 4937.0'
Design Pile Tip Penetration Elev. 4928.0'

B-1112 W - Minimum Pile Tip Penetration Elev. 4935.0'
Design Pile Tip Penetration Elev. 4925.0'

Elev. 4933.0' For B1112 E and Elev. 4930.0' For B1112 W Used for Steel Pile Estimates.
45 Tons Per Pile, both Abutments.

See Sheet TC-11 For Pile Details

STATE OF NEVADA
DEPARTMENT OF HIGHWAYS

B-1112 E & B-1112 W

EAST ABUTMENT DETAILS AND REINFORCING

FED. ROAD REG. NO.	STATE	PROJECT NO.	COUNTY	CONTROL SECTION	STATE ROUTE	SHEET NO.	TOTAL SHEETS
7	NEVADA	F-080-4(26)286	ELKO	EL-081	1	811	

TC-11

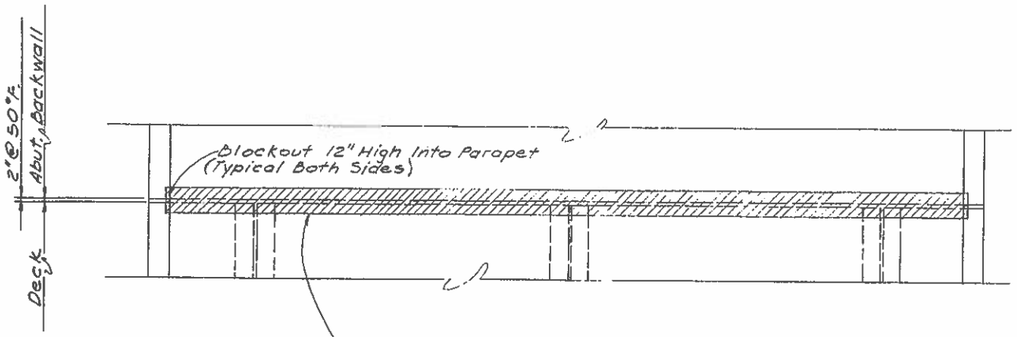

PLAN
EXPANSION JOINT

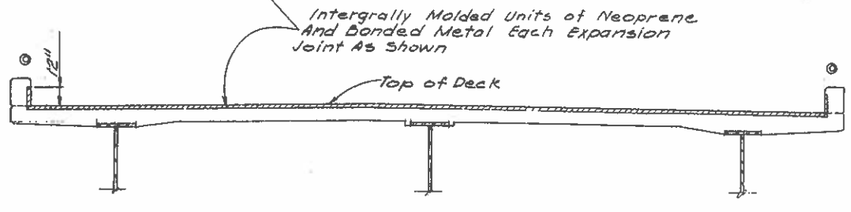

SECTION

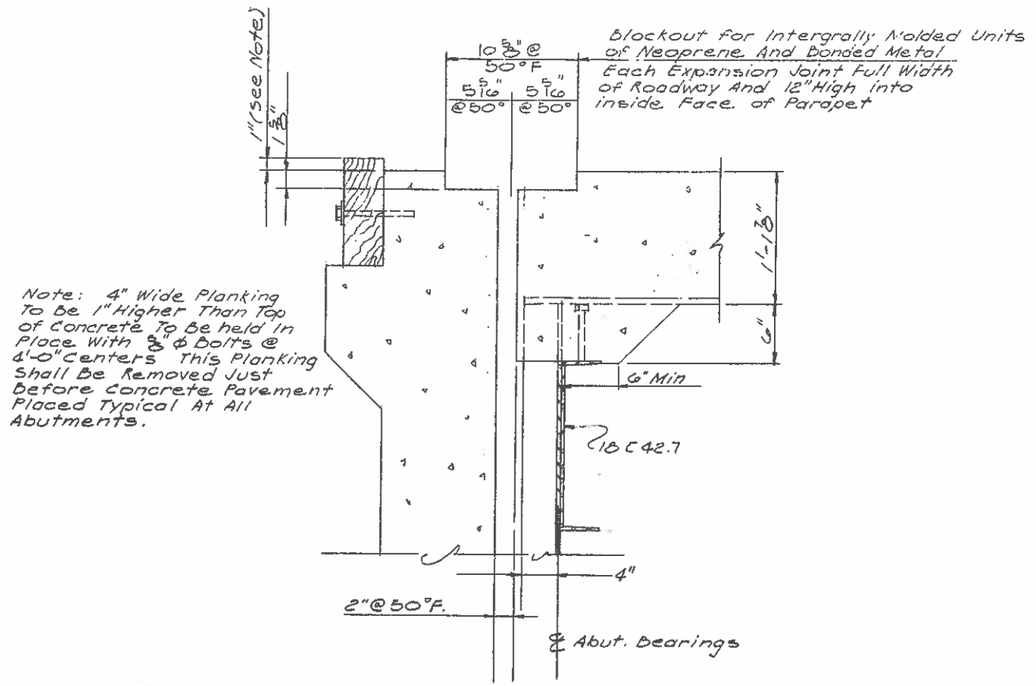

Note: 4" Wide Planking To Be 1" Higher Than Top of Concrete To Be held In Place With 3/4" ϕ Bolts @ 4'-0" Centers This Planking Shall Be Removed Just Before Concrete Pavement Placed Typical At All Abutments.

EXPANSION JOINT DETAILS

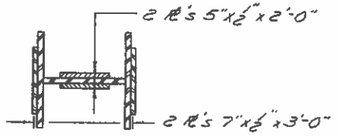

PLAN

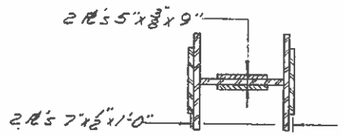

PLAN

*NOTE:
Weld Splice Plates To Upper Pile Sections; Set In Place And Tap Several Times With Pile Hammer Before Completion Of Welding. Piles Must Be Stopped At Least 3'-0" Above Ground Prior To Splicing.

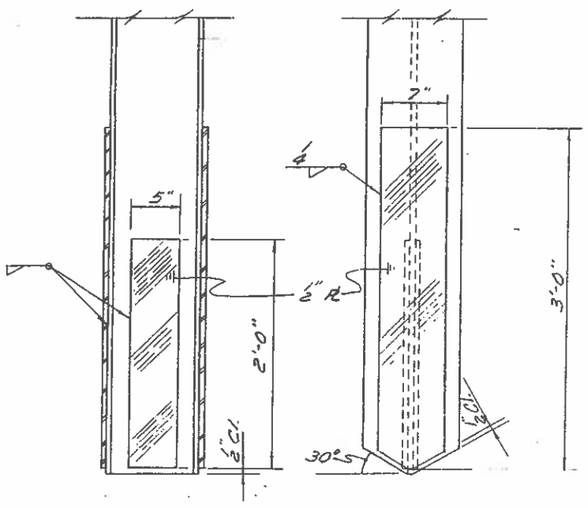

TYPICAL HP PILE POINT REINFORCEMENT DETAIL

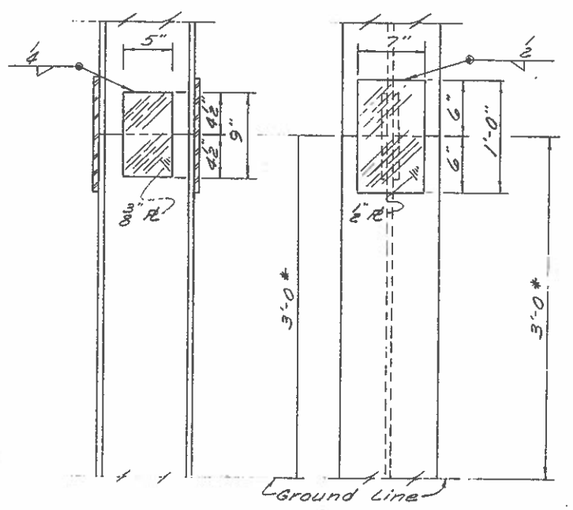

TYPICAL HP PILE SPLICE DETAIL

STATE OF NEVADA
DEPARTMENT OF HIGHWAYS

B-1112E & B-1112W

ABUTMENT DETAILS

IETZGEN 186-M MICROVEL

SED. ROAD REG. NO.	STATE	PROJECT NO.	COUNTY	CONTROL SECTION	STATE ROUTE	SHEET NO.	TOTAL SHEETS
I-80	NEVADA	F-080-4(26)286	ELKO	EL-051	1	B17	

TC-17

NOTE:
"Foundation Report Available For Contractors Study In District Office & Hqtrs. Bridge Div."

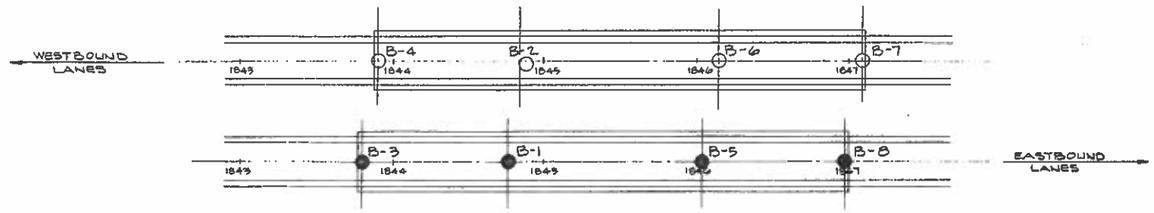

BORING PLAN

SCALE: 1" = 50'

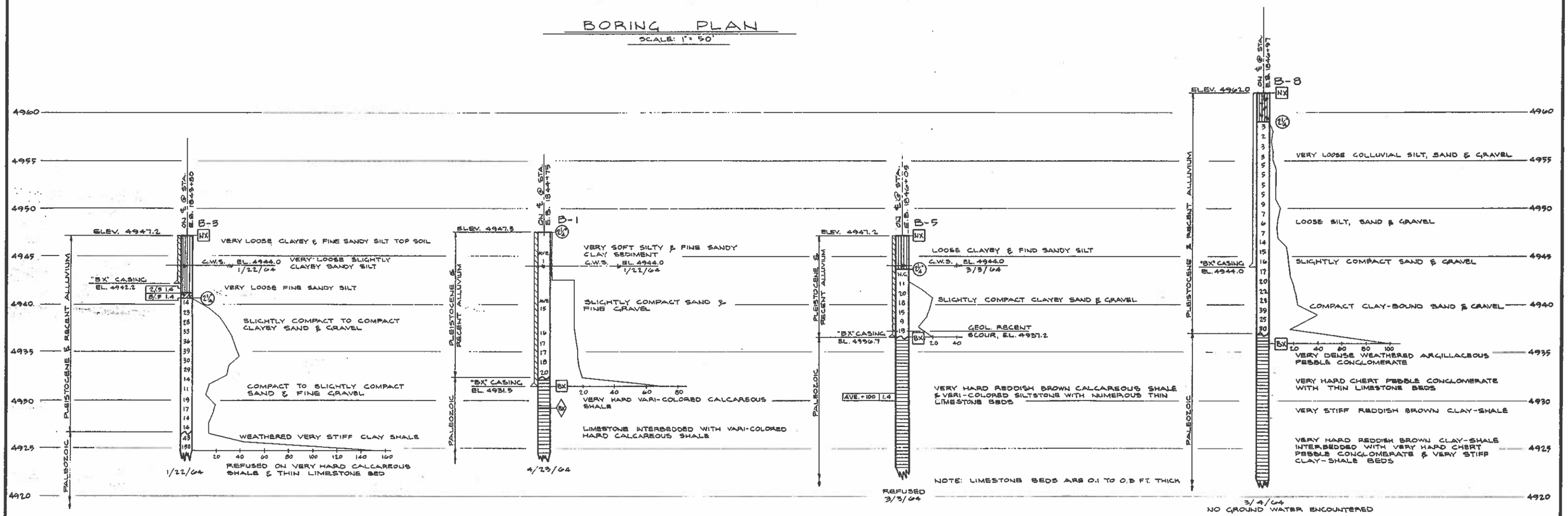

BORING PROFILE

SCALE: HORIZ = NONE
VERT = 1"=5'

LEGEND OF DRILLING, SAMPLING & TESTING OPERATIONS

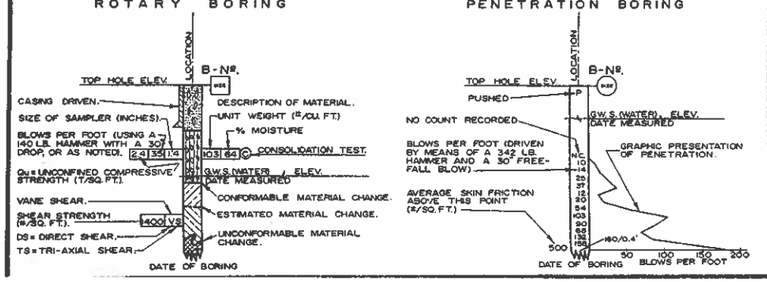

- PLAN OF ANY BORING
- PENETROMETER (FLUSH-COUPLED)
- 2½" CONE PENETROMETER
- SAMPLER BORING (DRY)
- ROTARY BORING (WET)
- AUGER BORING (DRY)
- JET BORING
- DIAMOND CORE BORING.
- TEST PIT

BIT SIZES; (O.D.): "AX" = 1 13/16", "BX" = 2 9/32", "NX" = 2 29/32".
CASING SIZES; (O.D.): "BX" = 2 7/8", "NX" = 3 ½".

THE UNIFIED SOIL CLASSIFICATION SYSTEM

MAJ. DIV.		LETTER	SYMBOL	NAME
COARSE GRAINED MATERIAL	GRAVEL AND GRAVELLY SOIL	GW		WELL-GRADED GRAVEL OR GRAVEL-SAND MIXTURES, LITTLE OR NO FINES.
		GP		POORLY-GRADED GRAVEL OR GRAVEL-SAND MIXTURES, LITTLE OR NO FINES.
		GM		SILTY GRAVEL, GRAVEL-SAND-SILT MIXTURES.
		GC		CLAYEY GRAVEL, GRAVEL-SAND-CLAY MIXTURES.
	SAND AND SANDY SOIL	SW		WELL-GRADED SAND OR GRAVELLY SAND, LITTLE OR NO FINES.
		SP		POORLY-GRADED SAND OR GRAVELLY SAND, LITTLE OR NO FINES.
		SM		SILTY SAND, SAND-SILT MIXTURES.
		SC		CLAYEY SAND, SAND-SILT MIXTURES
FINE GRAINED SOIL	SILTS AND CLAYS LL<50	ML		INORGANIC SILT AND VERY FINE SAND, ROCK FLOUR, SILTY OR CLAYEY FINE SAND OR CLAYEY SILT WITH SLIGHT PLASTICITY
		CL		INORGANIC CLAY OF LOW TO MEDIUM PLASTICITY, GRAVELLY CLAY, SANDY CLAY, SILTY CLAY, LEAN CLAY.
		OL		ORGANIC SILT AND ORGANIC SILT-CLAY OF LOW PLASTICITY.
	SILTS AND CLAYS LL>50	MH		INORGANIC SILT, MICACEOUS OR DIATOMACEOUS FINE SANDY OR SILTY SOILS, ELASTIC SILT.
		CH		INORGANIC CLAY OF HIGH PLASTICITY, FAT CLAY.
		OH		ORGANIC CLAY OF MEDIUM TO HIGH PLASTICITY, ORGANIC SILT.
HIGHLY ORGANIC SOILS		PT		PEAT AND OTHER HIGHLY ORGANIC SOILS.

ROCK CLASSIFICATION

SYMBOL	NAME
	IGNEOUS ROCK
	SEDIMENTARY ROCK
	METAMORPHIC ROCK

NOTE: CLASSIFICATION OF EARTH MATERIAL SHOWN ON THIS SHEET IS BASED UPON FIELD INSPECTION UNLESS NOTED OTHERWISE.

SOIL CONSISTENCY CLASSIFICATION

CONSISTENCY		* BLOWS PER FT.
GRANULAR	COHESIVE	
VERY LOOSE	VERY SOFT	0 TO 5
LOOSE	SOFT	5 TO 10
SLIGHTLY COMPACT	STIFF	10 TO 20
COMPACT	VERY STIFF	20 TO 35
DENSE	HARD	35 TO 70
VERY DENSE	VERY HARD	70

* (STANDARD PENETRATION TEST) BLOWS PER FT. (140 LB. HAMMER, 30" FREE-FALL BLOW USING A 2" O.D. x 1⅜" I.D. SAMPLER).

DWN. L.R.C.
CHK. C. H
DATE: APRIL 1964

REG. CIVIL ENG. NO. 1138
ENGINEERING GEOLOGIST

CLAIR A. HILL & ASSOCIATES
FOUNDATION ENGINEERING & TESTING LABORATORY
1525 COURT STREET REDDING, CALIFORNIA

LOG OF TEST BORINGS
HUMBOLDT RIVER CROSSING No. 3
STATE OF NEVADA
CARSON CITY NEVADA

DWG. NO.
C-1005.17
G-6

FED. ROAD REG. NO.	STATE	PROJECT NO.	COUNTY	CONTROL SECTION	STATE ROUTE	SHEET NO.	TOTAL SHEETS
I-80	NEVADA	I-080-4(26)286	ELKO	EL-081	1	818	

TC-18

NOTE:
"Foundation Report Available For Contractors Study In District Office & Hqtrs. Bridge Div."

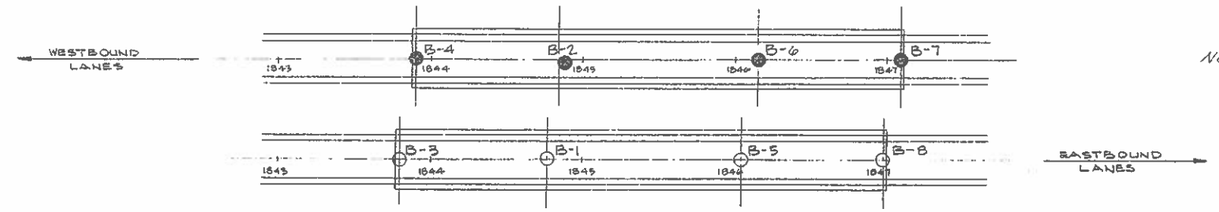

BORING PLAN

SCALE: 1" = 50'

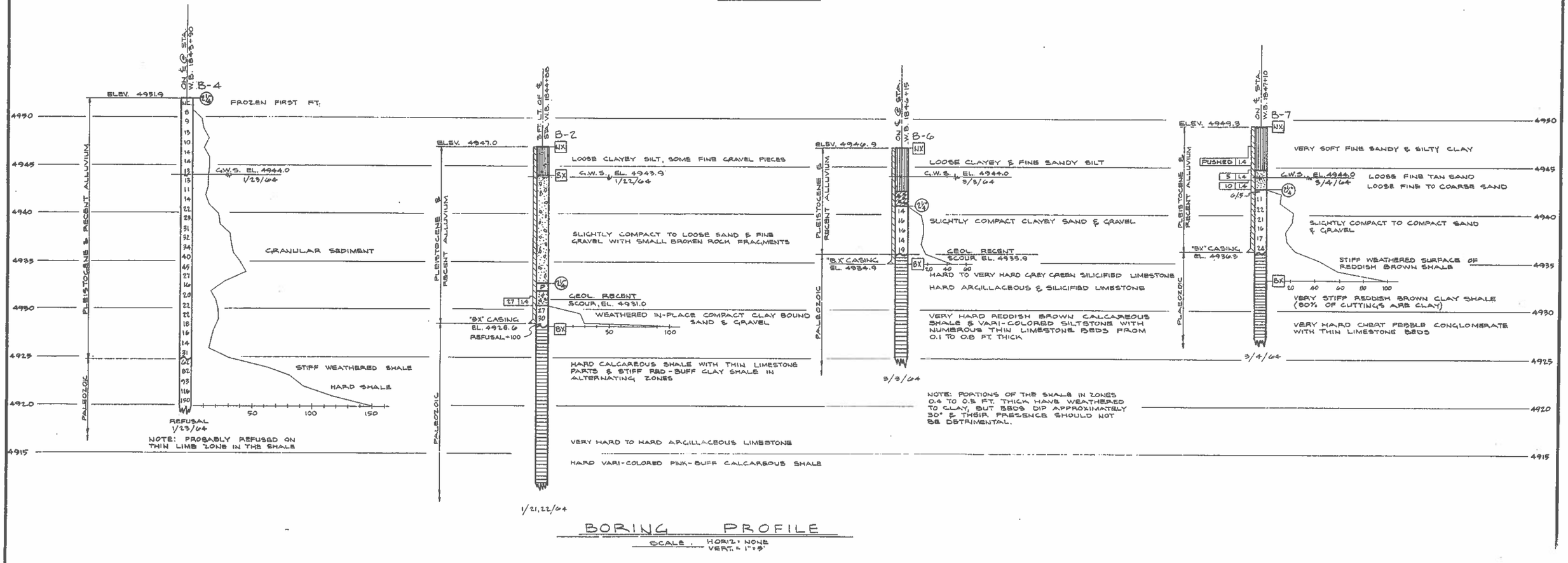

BORING PROFILE

SCALE: HORIZ: NONE VERT. 1" = 5'

LEGEND OF DRILLING, SAMPLING & TESTING OPERATIONS

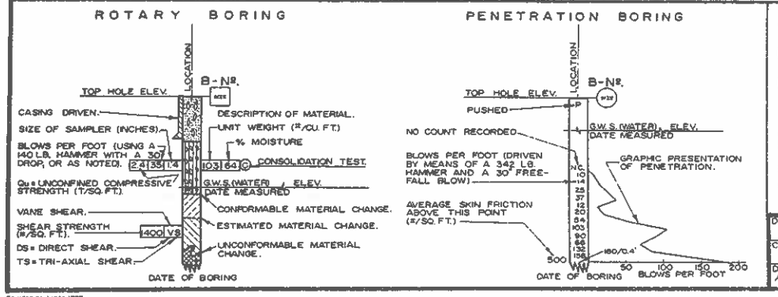

- PLAN OF ANY BORING
- PENETROMETER (FLUSH-COUPLED)
- 2 1/2" CONE PENETROMETER
- SAMPLER BORING (DRY)
- ROTARY BORING (WET)
- AUGER BORING (DRY)
- JET BORING
- DIAMOND CORE BORING.
- TEST PIT

BIT SIZES: (O.D.): "4X" = 1 13/16", "BX" = 2 9/32", "NX" = 2 29/32".
CASING SIZES: (O.D.): "BX" = 2 7/8", "NX" = 3 1/2".

THE UNIFIED SOIL CLASSIFICATION SYSTEM

MAJ. DIV.		LETTER	SYMBOL	NAME
COARSE GRAINED MATERIAL	GRAVELLY SOIL	GW		WELL-GRADED GRAVEL OR GRAVEL-SAND MIXTURES, LITTLE OR NO FINES.
		GP		POORLY-GRADED GRAVEL OR GRAVEL-SAND MIXTURES, LITTLE OR NO FINES.
		GM		SILTY GRAVEL, GRAVEL-SAND-SILT MIXTURES.
		GC		CLAYEY GRAVEL, GRAVEL-SAND-CLAY MIXTURES.
	SAND SANDY SOIL	SW		WELL-GRADED SAND OR GRAVELLY SAND, LITTLE OR NO FINES
		SP		POORLY-GRADED SAND OR GRAVELLY SAND, LITTLE OR NO FINES
		SM		SILTY SAND, SAND-SILT MIXTURES.
		SC		CLAYEY SAND, SAND-SILT MIXTURES.

MAJ. DIV.		LETTER	SYMBOL	NAME
FINE GRAINED SOIL	SILTS AND CLAYS LL<50	ML		INORGANIC SILT AND VERY FINE SAND, ROCK FLOUR, SILTY OR CLAYEY FINE SAND OR CLAYEY SILT WITH SLIGHT PLASTICITY
		CL		INORGANIC CLAY OF LOW TO MEDIUM PLASTICITY, GRAVELLY CLAY, SANDY CLAY, SILTY CLAY, LEAN CLAY.
		OL		ORGANIC SILT AND ORGANIC SILT-CLAY OF LOW PLASTICITY.
	SILTS AND CLAYS LL>50	MH		INORGANIC SILT, MICACEOUS OR DIATOMACEOUS FINE SANDY OR SILTY SOILS, ELASTIC SILT.
		CH		INORGANIC CLAY OF HIGH PLASTICITY, FAT CLAY.
		OH		ORGANIC CLAY OF MEDIUM TO HIGH PLASTICITY, ORGANIC SILT.
HIGHLY ORGANIC SOILS		PT		PEAT AND OTHER HIGHLY ORGANIC SOILS

ROCK CLASSIFICATION

SYMBOL	NAME
	IGNEOUS ROCK
	SEDIMENTARY ROCK
	METAMORPHIC ROCK

NOTE: CLASSIFICATION OF EARTH MATERIAL SHOWN ON THIS SHEET IS BASED UPON FIELD INSPECTION UNLESS NOTED OTHERWISE.

SOIL CONSISTENCY CLASSIFICATION

CONSISTENCY		* BLOWS PER FT.
GRANULAR	COHESIVE	
VERY LOOSE	VERY SOFT	0 TO 5
LOOSE	SOFT	5 TO 10
SLIGHTLY COMPACT	STIFF	10 TO 20
COMPACT	VERY STIFF	20 TO 35
DENSE	HARD	35 TO 70
VERY DENSE	VERY HARD	70

* (STANDARD PENETRATION TEST) BLOWS PER FT. 140 LB. HAMMER, 30" FREE-FALL BLOW USING A 2" O.D. x 1 3/8" I.D. SAMPLER).

DWN: L. P. C.
CHK: C. H.
DATE: APRIL 1964

REG. CIVIL ENG. NO. 1138

ENGINEERING GEOLOGIST

CLAIR A. HILL & ASSOCIATES
FOUNDATION ENGINEERING & TESTING LABORATORY
1525 COURT STREET REDDING, CALIFORNIA

LOG OF TEST BORINGS
HUMBOLDT RIVER CROSSING No. 3
STATE OF NEVADA
CARSON CITY NEVADA

DWG. NO. C-1005.17 G-7

PRINTED ON LIETZ 1029

FED. ROAD REG. NO.	STATE	PROJECT NO.	COUNTY	CONTROL SECTION	STATE ROUTE	SHEET NO.	TOTAL SHEETS
7	NEVADA	I-080-4(26)286	ELKO	EL-081	1	819	

FC 1

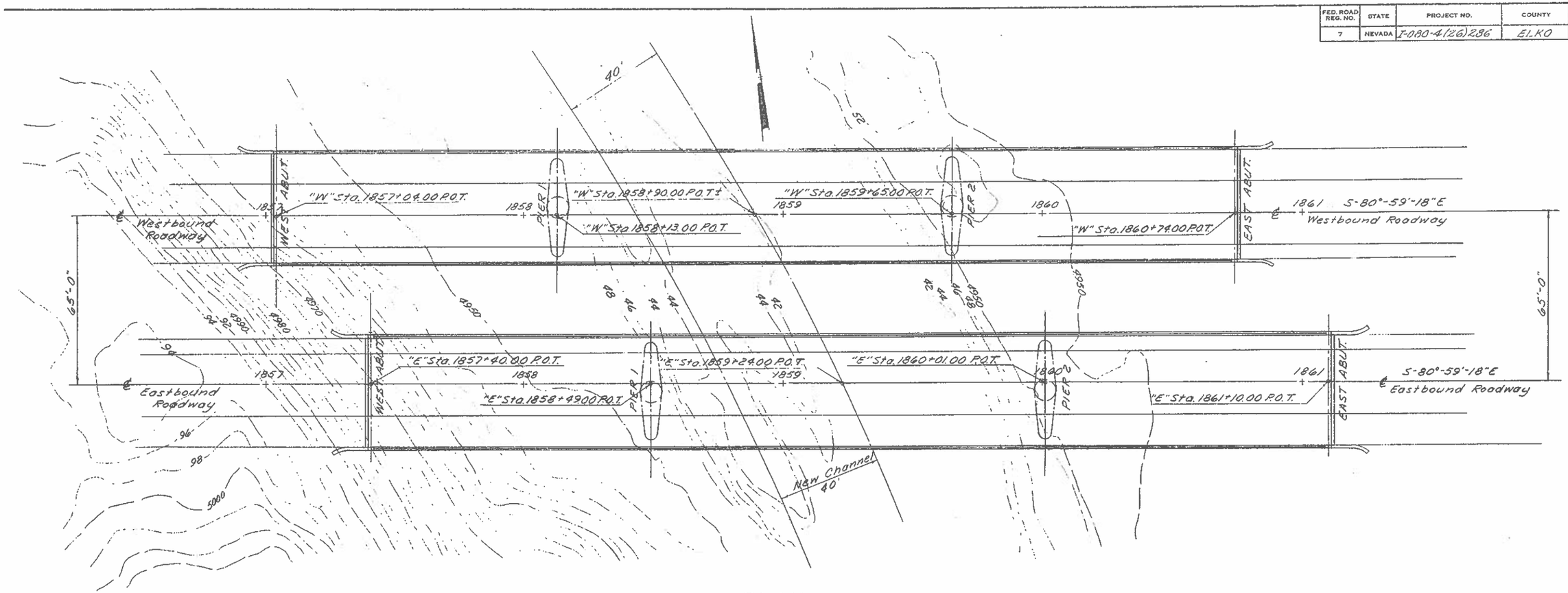

PLAN

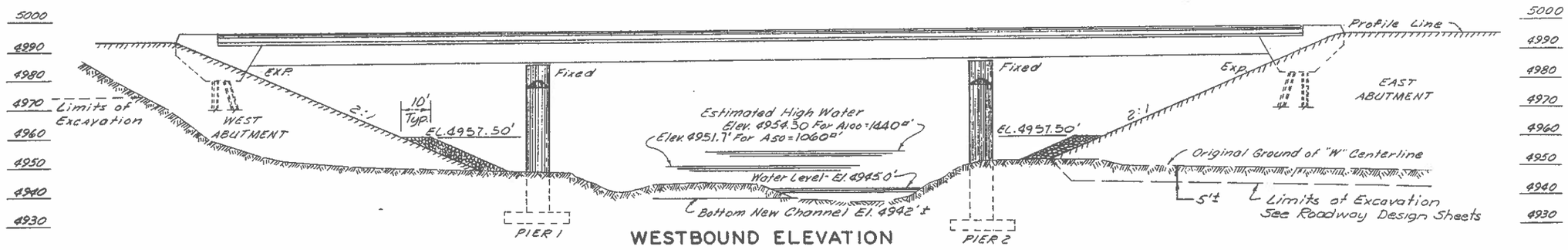

WESTBOUND ELEVATION

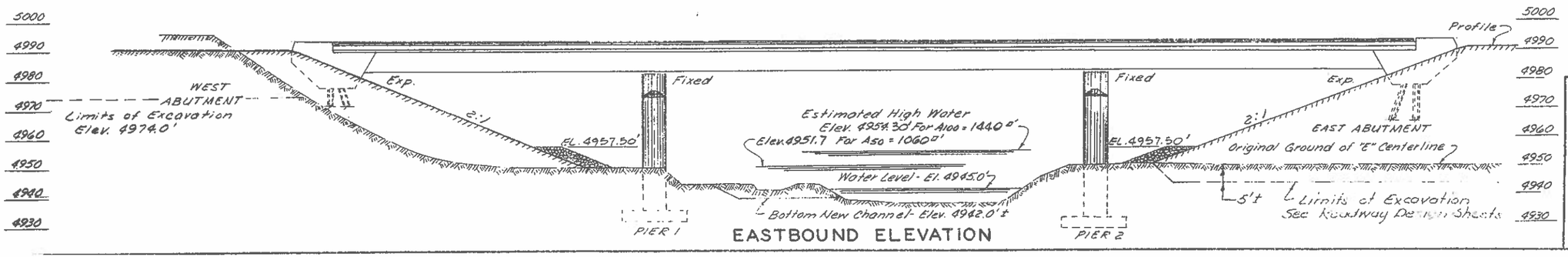

EASTBOUND ELEVATION

STRUCTURAL DESIGN DIVISION			
DESIGN	BY: F.G.T.	✓	BY: E.F.W.
DRAWING	BY: D.T.P.	✓	BY: F.I.M.
QUANTITIES	BY: R.N.B.	✓	BY: W.J.W.

APPROVED:
Alfred H. Westett
PRINCIPAL BRIDGE ENGINEER
Hugh E. Brown
ASSISTANT BRIDGE ENGINEER
W. Alan Odell
BRIDGE ENGINEER

STATE OF NEVADA
DEPARTMENT OF HIGHWAYS

B-1113E & B-1113W

CARLIN CANYON BRIDGES
4 TH CROSSING

FED. ROAD REG. NO.	STATE	PROJECT NO.	COUNTY	CONTROL SECTION	STATE ROUTE	SHEET NO.	TOTAL SHEETS
7	NEVADA	I-080-4(26)286	ELKO	EL-081	1	B20	

FC 2

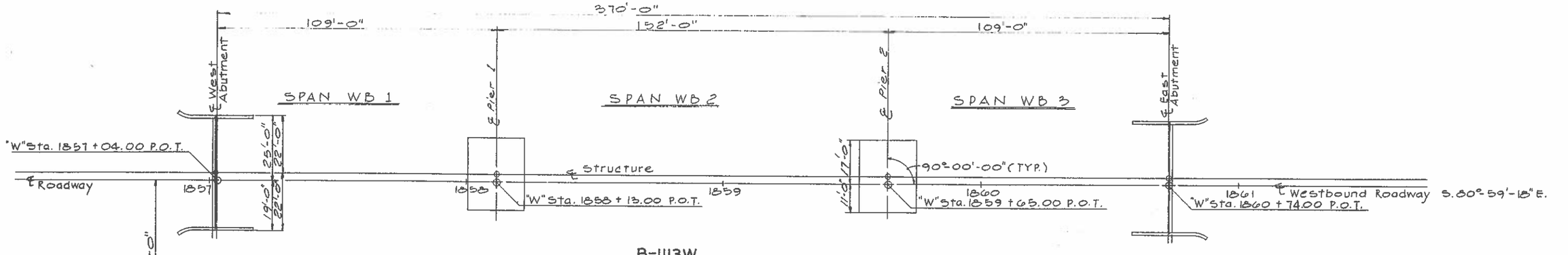

B-1113W

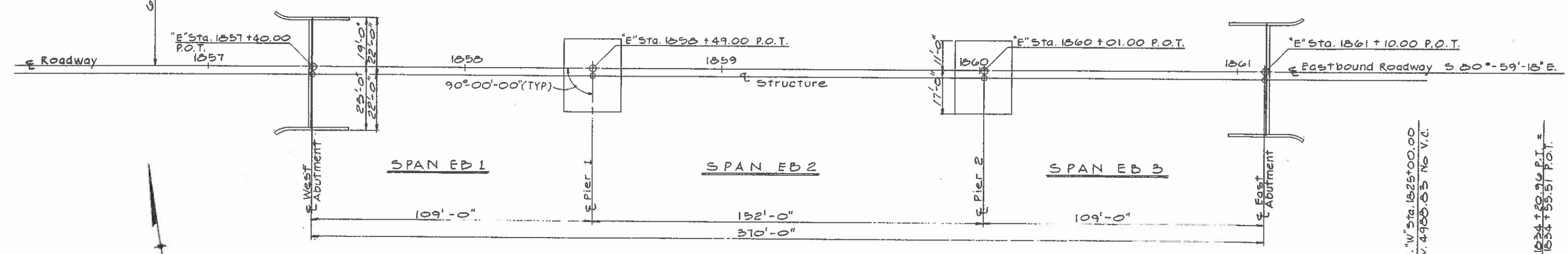

B-1113E

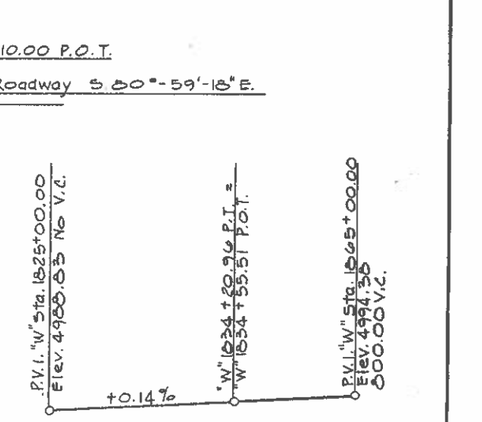

PROFILE LINE
WESTBOUND ROADWAY

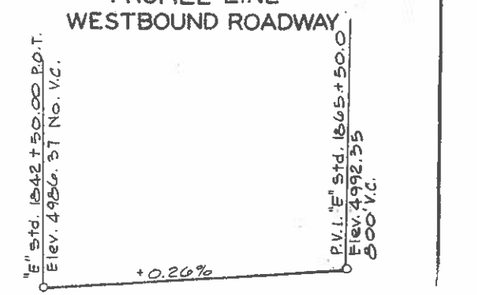

PROFILE LINE
EASTBOUND ROADWAY

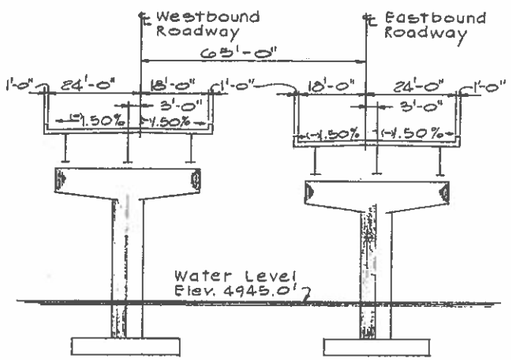

SECTION NORMAL TO ROADWAY

-GENERAL NOTES-

1. DESIGN SPECIFICATIONS: AASHO "STANDARD SPECIFICATIONS FOR HIGHWAY BRIDGES, 1969," AND "INTERIM SPECIFICATIONS THROUGH 1970."
2. CONSTRUCTION SPECIFICATIONS: STATE OF NEVADA DEPARTMENT OF HIGHWAYS "STANDARD SPECIFICATIONS FOR ROAD AND BRIDGE CONSTRUCTION, 1968," EXCEPT AS NOTED BELOW, AND IN THE SPECIAL PROVISIONS FOR THIS CONTRACT.
3. LIVE LOAD: STANDARD HS 20 - 44 OR ALTERNATE LOADING.
4. CONCRETE: ALL CONCRETE SHALL BE CLASS AA, MAJOR, EXCEPT DECK SECTION WHICH SHALL BE CLASS AA MODIFIED.
5. REINFORCING STEEL: ALL REINFORCING STEEL IS ASTM A615 GRADE 60. DIMENSIONS ARE TO CENTER OF BARS UNLESS OTHERWISE NOTED. BAR SIZES THREE (3) TO NINE (9) ARE INDICATED BY THE FIRST NUMBER IN THE MARK, TEN (10) OR LARGER BY THE FIRST TWO NUMBERS.
6. STRUCTURAL STEEL: ALL STRUCTURAL STEEL MEMBERS TO BE ASTM A36 STEEL UNLESS OTHERWISE NOTED.
7. CAMBER: THE CAMBER SHALL BE AS SHOWN ON THE PLANS.
8. PILING: ALL PILING TO BE HP 10 X 42 H PILES. MINIMUM BEARING VALUE IS 45 TONS PER PILE.
9. PILE DRIVING: THE ENGINEERING NEW FORMULA P=2E/(S+0.1) SHALL BE USED TO DETERMINE THE BEARING VALUE OF THE PILES EXCEPT WHERE LOAD TESTS ARE REQUIRED. TERMS P, E, AND S ARE DEFINED IN ARTICLE 508.03.05 OF THE CONSTRUCTION SPECIFICATIONS.
10. SPREAD FOOTINGS: MAXIMUM BEARING VALUE FOR PIER FOOTING IS TEN (10) TONS PER SQUARE FOOT. THE BOTTOM OF ALL FOOTINGS SHALL EXTEND TO A DEPTH OF A MINIMUM OF TWO (2) FEET BELOW THE BEDROCK LIMIT LINES OF THE FOOTING BLOCK THROUGHOUT THE BEDROCK EXCAVATION DEPTH, AND FOOTING BLOCKS SHOULD BE POURED NEAT AGAINST THE ROCK. ANY INCREASE THERE IS IN QUANTITIES FROM PROVIDING THE TWO FOOT MINIMUM DEPTH INTO THE BEDROCK SHALL BE PAID FOR AT CONTRACT UNIT PRICES.
11. BRIDGE RAILING: TO BE BRIDGE RAIL TYPE "H".
12. FINE SURFACE FINISH: SURFACES REQUIRING A FINE FINISH ARE DESIGNATED ON THE PLANS BY THE ABBREVIATION "FSF."
13. CONSTRUCTION TYPE CODE: X071.

-QUANITIES-

ITEM	UNIT.	B1113E QUAN.	B1113W QUAN.
CHANNEL EXCAVATION	CU.YD.	493.0	493.0
BACKFILL	CU.YD.	591.0	564.0
CLASS AA CONCRETE(MAJOR)	CU.YD.	637.9	648.4
STEEL REINFORCED ELASTOMERIC EXPANSION JT. 2½" M.	LIN. FT.	88.6	88.6
REINFORCING STEEL	LBS.	277,282.0	279,097.0
STRUCTURAL STEEL	LBS.	481,984.0	481,984.0
BRIDGE RAIL TYPE "H"	LIN. FT.	740.8	740.8
FURNISH STEEL PILES	LIN. FT.	1237.0	1328.0
DRIVE STEEL PILES	EACH	32.0	32.0
SPLICES	EACH	16.0	16.0
STRUCTURE EXCAVATION	CU. YD.	877.0	848.0
CLASS AA CONCRETE(Modified	CU. YD.	566.0	566.0

STATE OF NEVADA
DEPARTMENT OF HIGHWAYS

B-1113E & B-1113W
STRUCTURE GEOMETRICS AND GENERAL NOTES

FED. ROAD REG. NO.	STATE	PROJECT NO.	COUNTY	CONTROL SECTION	STATE ROUTE	SHEET NO.	TOTAL SHEETS
7	NEVADA	I-080-4(26)286	ELKO	EL-081	1	821	

FC 3

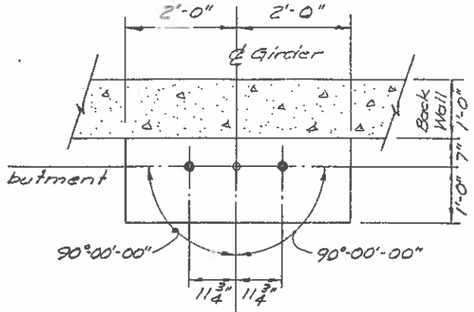

ANCHOR BOLT LAYOUT

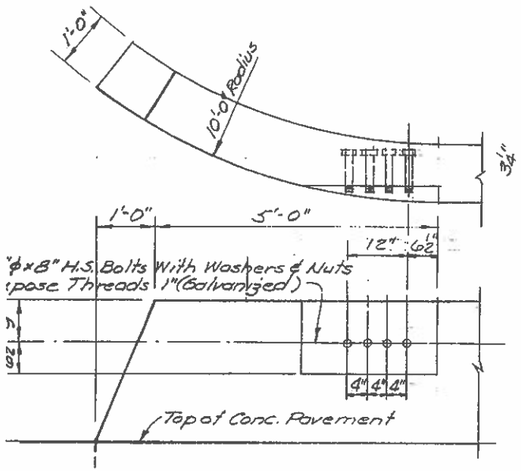

GUARD RAIL ATTACHMENT

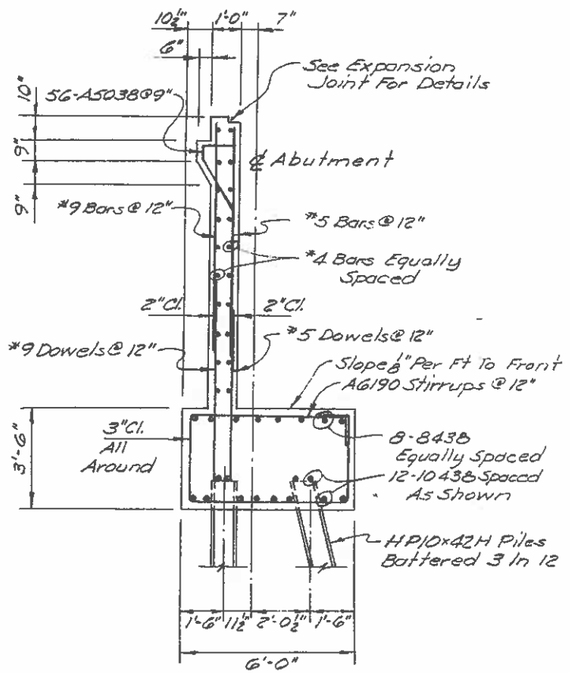

TYPICAL SECTION

1. Wingwall and Backwall from top of Footing up to be poured after the Structural Steel is in place.

2. Slope top of Wingwall with Roadway Grade.

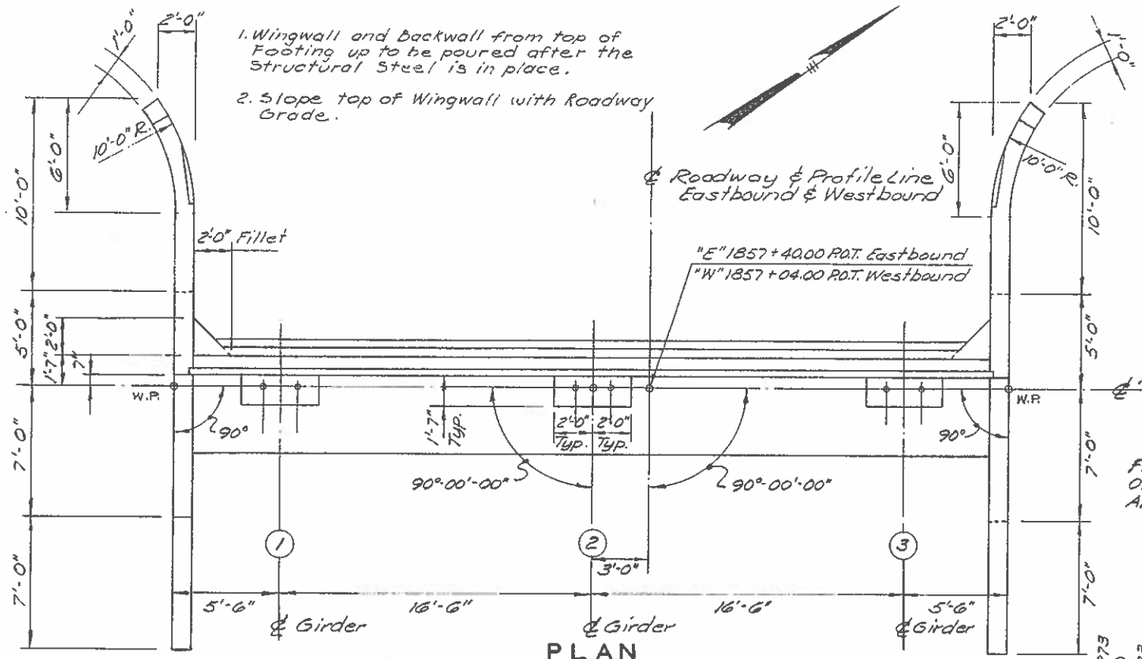

PLAN
(Westbound Abutment Opposite Hand)

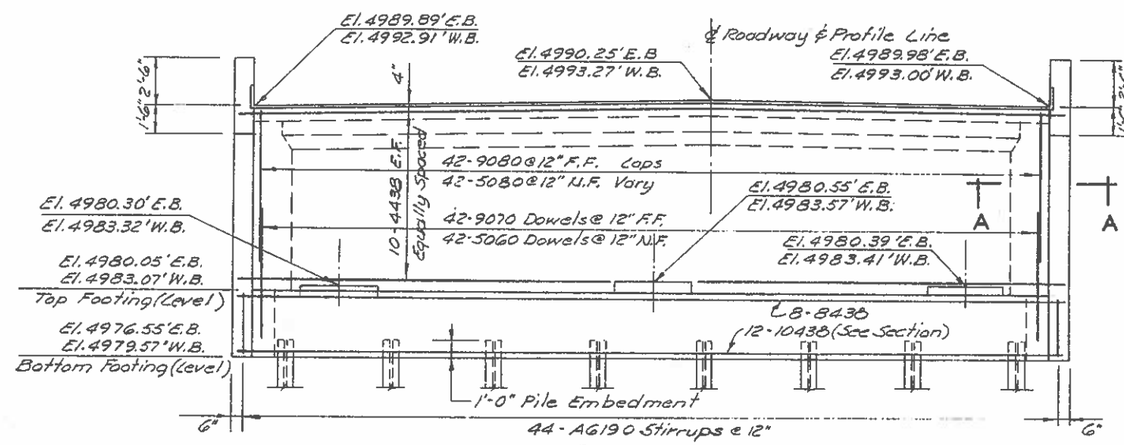

ELEVATION
(Westbound Abutment Opposite Hand)

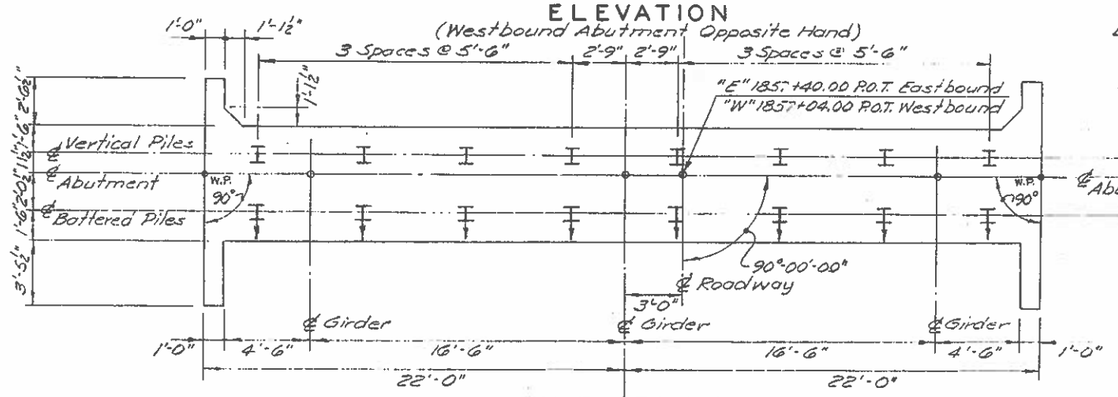

PILE PLAN
(Westbound Abutment Opposite Hand)

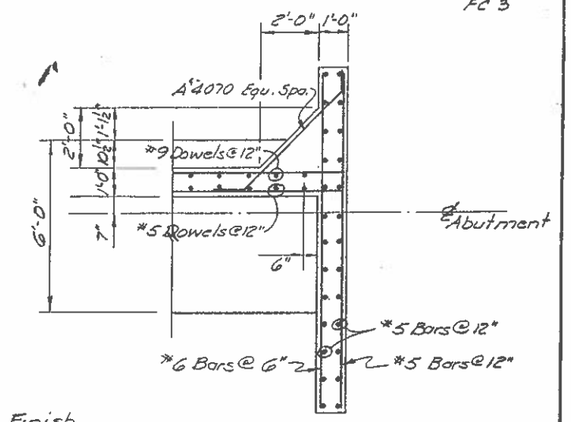

SECTION A-A

Fine Surface Finish On All Exposed Surfaces Above Finished Grade

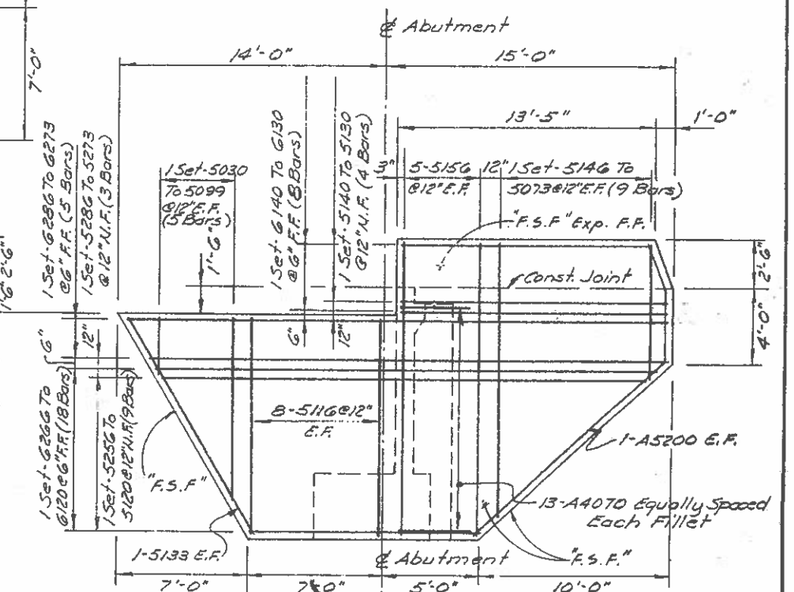

WINGWALL REINFORCING

B-1113E - Minimum Pile Tip Penetration Elev. 4959.0'
Design Pile Tip Penetration Elev. 4949.0'

B-1113W - Minimum Pile Tip Penetration Elev. 4959.0'
Design Pile Tip Penetration Elev. 4949.0'

Elev. 4954.0' Used For Furnish Steel Pile Estimate Both Abutments,
45 Tons Per Pile, Both Abutments.

See Sheet TC-11 For Pile Details.

STATE OF NEVADA
DEPARTMENT OF HIGHWAYS

B-1113E & B-1113W

WEST ABUTMENT DETAILS AND REINFORCING

FED. ROAD REG. NO.	STATE	PROJECT NO.	COUNTY	CONTROL SECTION	STATE ROUTE	SHEET NO.	TOTAL SHEETS
7	NEVADA	I-080-4(26)286	ELKO	EL-081	1	822	

PC 4

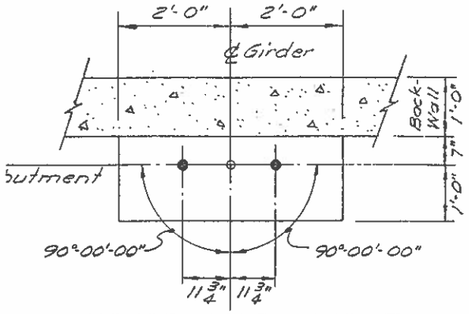

ANCHOR BOLT LAYOUT

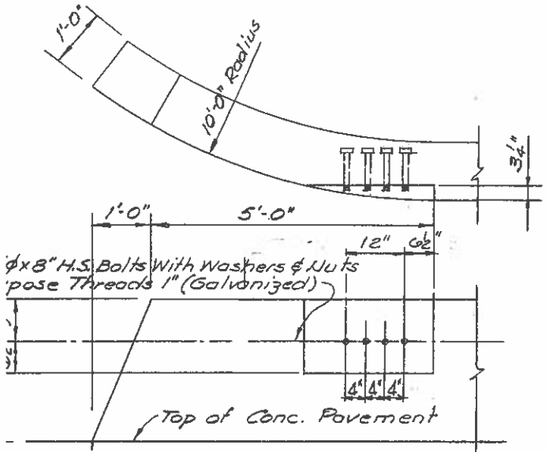

GUARD RAIL ATTACHMENT

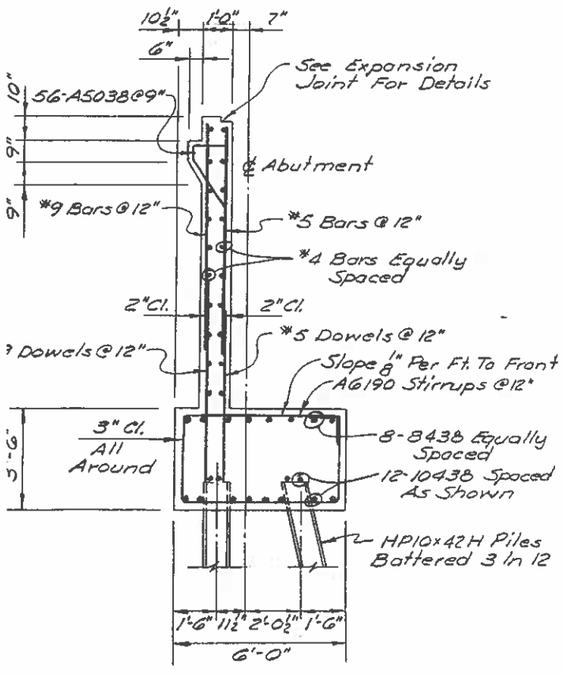

TYPICAL SECTION

NOTE:
1. Wingwall and Backwall from top of Footing up to be poured after the Structural Steel is in place.
2. Slope top of Wingwall with Roadway grade.

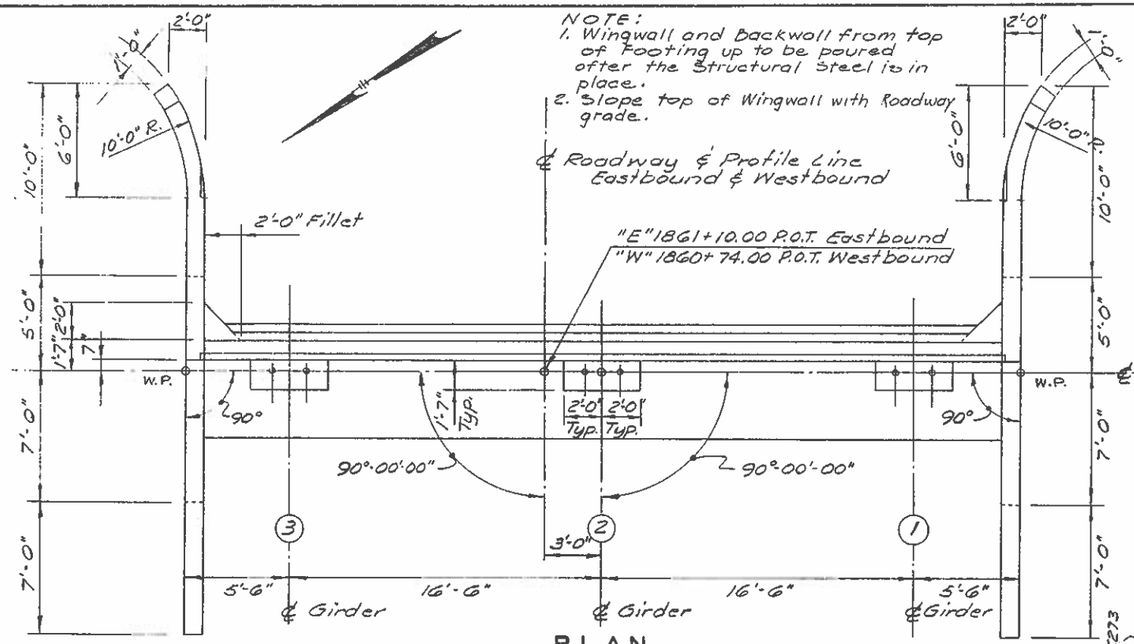

PLAN
(Westbound Abutment Opposite Hand)

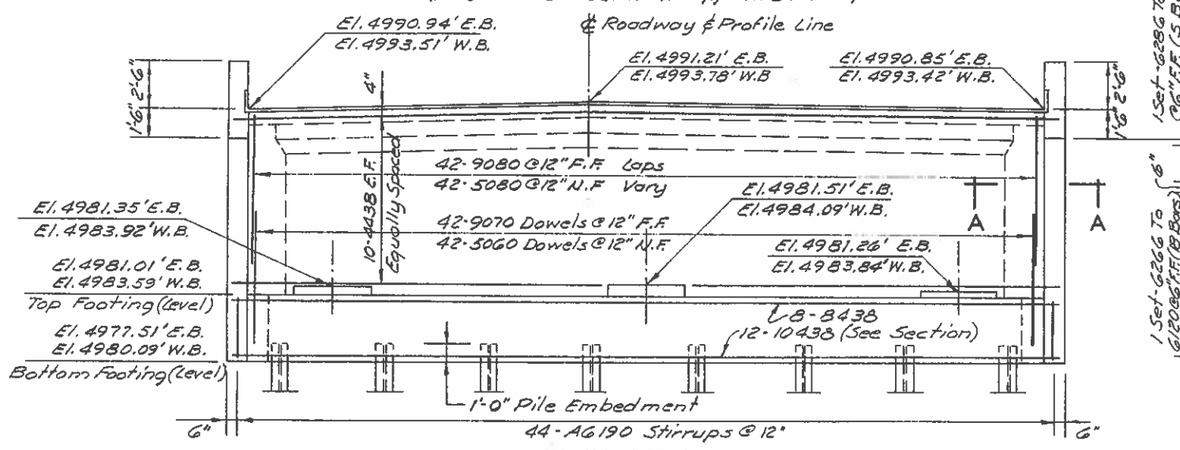

ELEVATION
(Westbound Abutment Opposite Hand)

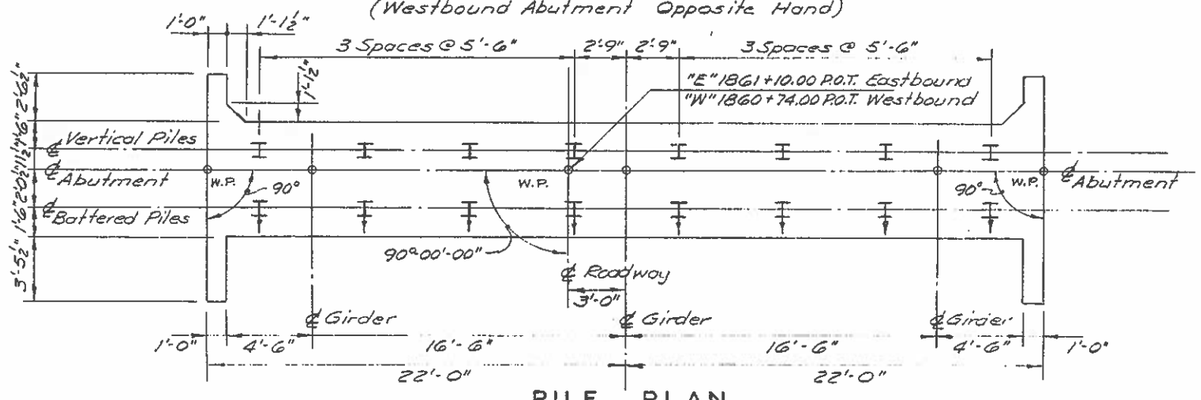

PILE PLAN
(Westbound Abutment Opposite Hand)

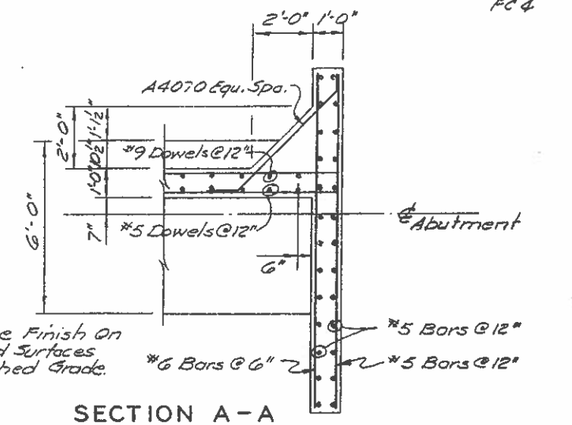

SECTION A-A

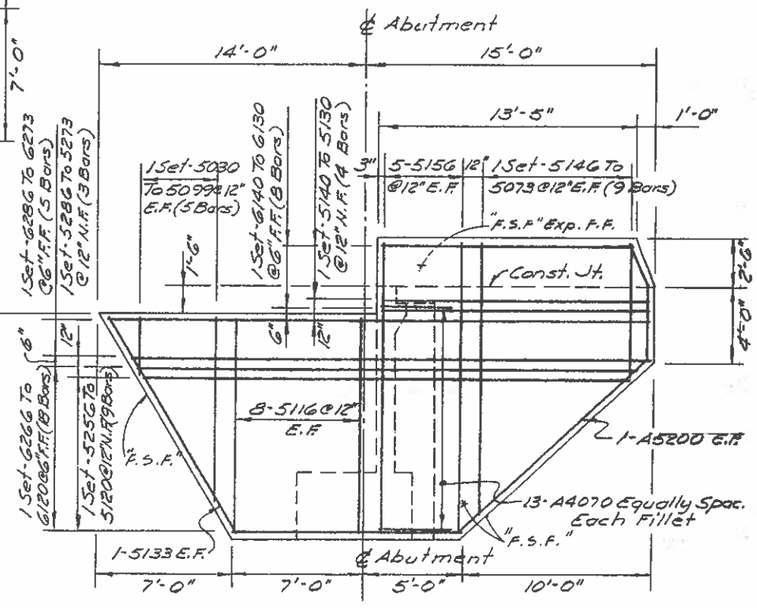

WINGWALL REINFORCING

B-1113E - Minimum Pile Tip Penetration Elev. 4931.0'
Design Pile Tip Penetration Elev. 4921.0'

B-1113W - Minimum Pile Tip Penetration Elev. 4931.0'
Design Pile Tip Penetration Elev. 4921.0'

Elev. 4926.0' Used For Furnish Steel Pile Estimate - Both Abutments
45 Tons Per Pile, Both Abutments.

See Sheet TC-11 For Pile Details.

STATE OF NEVADA
DEPARTMENT OF HIGHWAYS

B-1113E & B-1113W

EAST ABUTMENT DETAILS AND REINFORCING

FED. ROAD REG. NO.	STATE	PROJECT NO.	COUNTY	CONTROL SECTION	STATE ROUTE	SHEET NO.	TOTAL SHEETS
I-80	NEVADA	I-080-4(26)286	ELKO	EL-081	1	B36	

FC 1B

NOTE:
"Foundation Report Available For Contractors Study In District Office & Hqtrs Bridge Div."

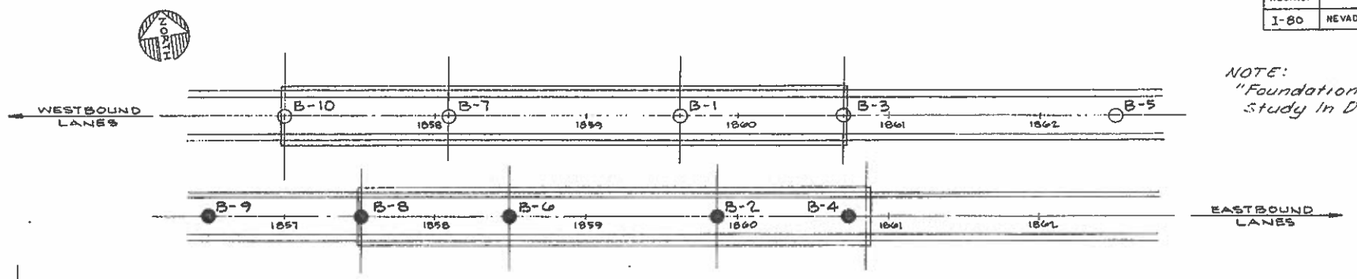

BORING PLAN

SCALE: 1" = 50

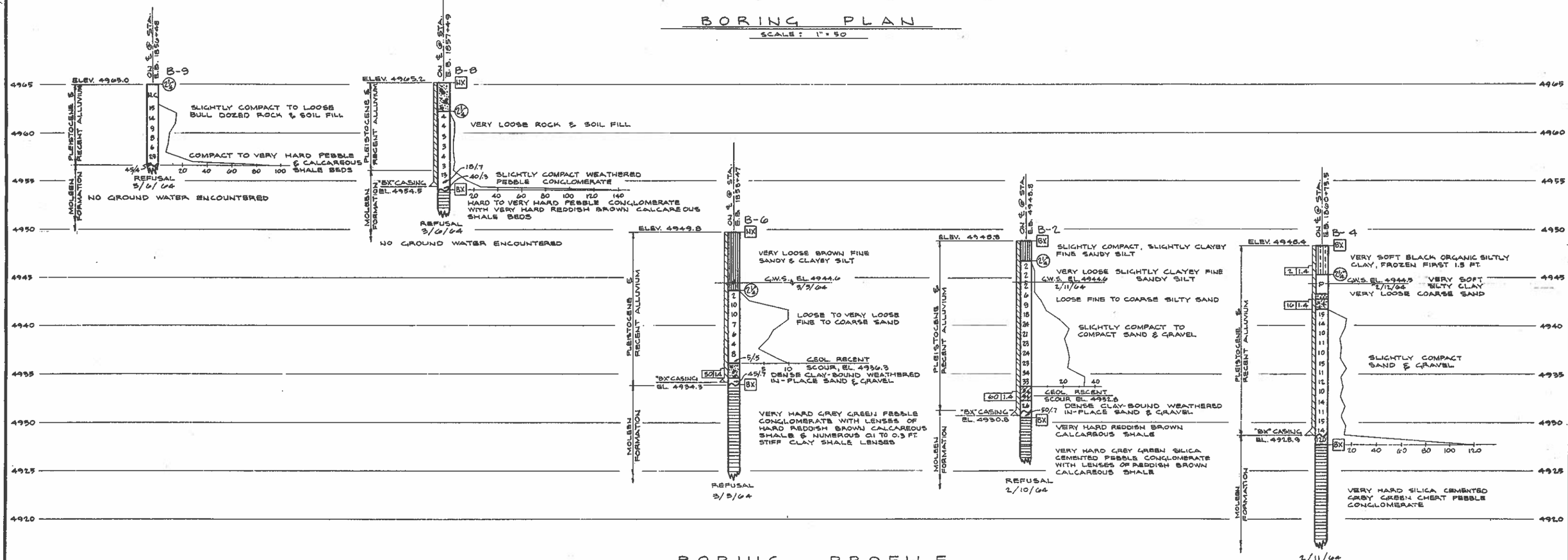

BORING PROFILE

SCALE: HORIZ. = NONE VERT. 1" = 5'

LEGEND OF DRILLING, SAMPLING & TESTING OPERATIONS

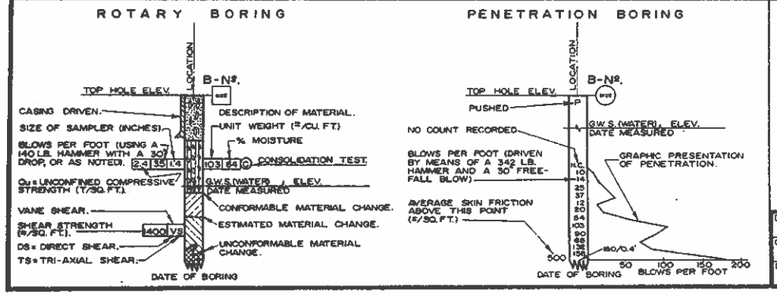

- PLAN OF ANY BORING
- PENETROMETER (FLUSH-COUPLED)
- 2 ¼" CONE PENETROMETER
- SAMPLER BORING (DRY)
- ROTARY BORING (WET)
- AUGER BORING (DRY)
- JET BORING
- DIAMOND CORE BORING.
- TEST P.T

BIT SIZES; (O.D.): "AX" = 1 13/16", "BX" = 2 3/32", "NX" = 2 29/32".
CASING SIZES; (O.D.): "BX" = 2 7/8", "NX" = 3 ½".

THE UNIFIED SOIL CLASSIFICATION SYSTEM

MAJ. DIV.		LETTER	SYMBOL	NAME
COARSE GRAINED MATERIAL	GRAVEL AND GRAVELLY SOIL	GW		WELL-GRADED GRAVEL OR GRAVEL-SAND MIXTURES, LITTLE OR NO FINES.
		GP		POORLY-GRADED GRAVEL OR GRAVEL-SAND MIXTURES, LITTLE OR NO FINES.
		GM		SILTY GRAVEL, GRAVEL-SAND-SILT MIXTURES.
		GC		CLAYEY GRAVEL, GRAVEL-SAND-CLAY MIXTURES.
	SAND AND SANDY SOIL	SW		WELL-GRADED SAND OR GRAVELLY SAND, LITTLE OR NO FINES
		SP		POORLY-GRADED SAND OR GRAVELLY SAND, LITTLE OR NO FINES
		SM		SILTY SAND, SAND-SILT MIXTURES.
		SC		CLAYEY SAND, SAND-SILT MIXTURES.
FINE GRAINED SOIL	SILTS AND CLAYS LL<50	ML		INORGANIC SILT AND VERY FINE SAND, ROCK FLOUR, SILTY OR CLAYEY FINE SAND OR CLAYEY SILT WITH SLIGHT PLASTICITY.
		CL		INORGANIC CLAY OF LOW TO MEDIUM PLASTICITY, GRAVELLY CLAY, SANDY CLAY, SILTY CLAY, LEAN CLAY.
		OL		ORGANIC SILT AND ORGANIC SILT-CLAY OF LOW PLASTICITY.
	SILTS AND CLAYS LL>50	MH		INORGANIC SILT, MICACEOUS OR DIATOMACEOUS FINE SANDY OR SILTY SOILS, ELASTIC SILT.
		CH		INORGANIC CLAY OF HIGH PLASTICITY, FAT CLAY.
		OH		ORGANIC CLAY OF MEDIUM TO HIGH PLASTICITY, ORGANIC SILT.
HIGHLY ORGANIC SOILS		PT		PEAT AND OTHER HIGHLY ORGANIC SOILS.

ROCK CLASSIFICATION

SYMBOL	NAME
	IGNEOUS ROCK
	SEDIMENTARY ROCK
	METAMORPHIC ROCK

NOTE:
CLASSIFICATION OF EARTH MATERIAL SHOWN ON THIS SHEET IS BASED UPON FIELD INSPECTION UNLESS NOTED OTHERWISE.

SOIL CONSISTENCY CLASSIFICATION

CONSISTENCY		* BLOWS PER FT.
GRANULAR	COHESIVE	
VERY LOOSE	VERY SOFT	0 TO 5
LOOSE	SOFT	5 TO 10
SLIGHTLY COMPACT	STIFF	10 TO 20
COMPACT	VERY STIFF	20 TO 35
DENSE	HARD	35 TO 70
VERY DENSE	VERY HARD	70

* (STANDARD PENETRATION TEST) BLOWS PER FT. (140 LB. HAMMER, 30" FREE-FALL BLOW USING A 2" O.D. x 1⅜" I.D. SAMPLER).

DWN. L.P.C.
CHK. C.H.
DATE: MAY 1964

Clair Hill
REG. CIVIL ENG. NO. 1138
R.H. Harwood
ENGINEERING GEOLOGIST

CLAIR A. HILL & ASSOCIATES

FOUNDATION ENGINEERING & TESTING LABORATORY

1525 COURT STREET REDDING, CALIFORNIA

LOG OF TEST BORINGS
HUMBOLDT RIVER CROSSING No. 4
STATE OF NEVADA
CARSON CITY NEVADA

DWG. NO.
C-1005.17
G-9

FED. ROAD REG. NO.	STATE	PROJECT NO.	COUNTY	CONTROL SECTION	STATE ROUTE	SHEET NO.	TOTAL SHEETS
I-80	NEVADA	I-080-4(26)286	ELKO	EL-081	1	835	

FC 17

NOTE:
"Foundation Report Available For Contractors Study In District Office & Hqtrs. Bridge Div."

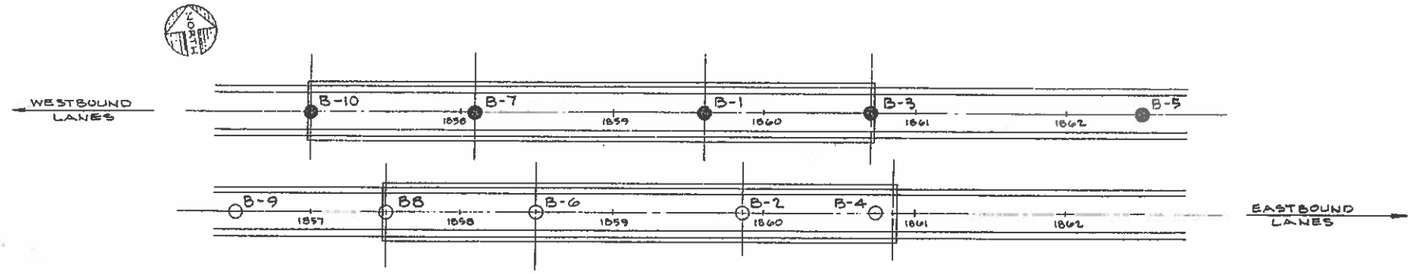

BORING PLAN

SCALE: 1" = 50'

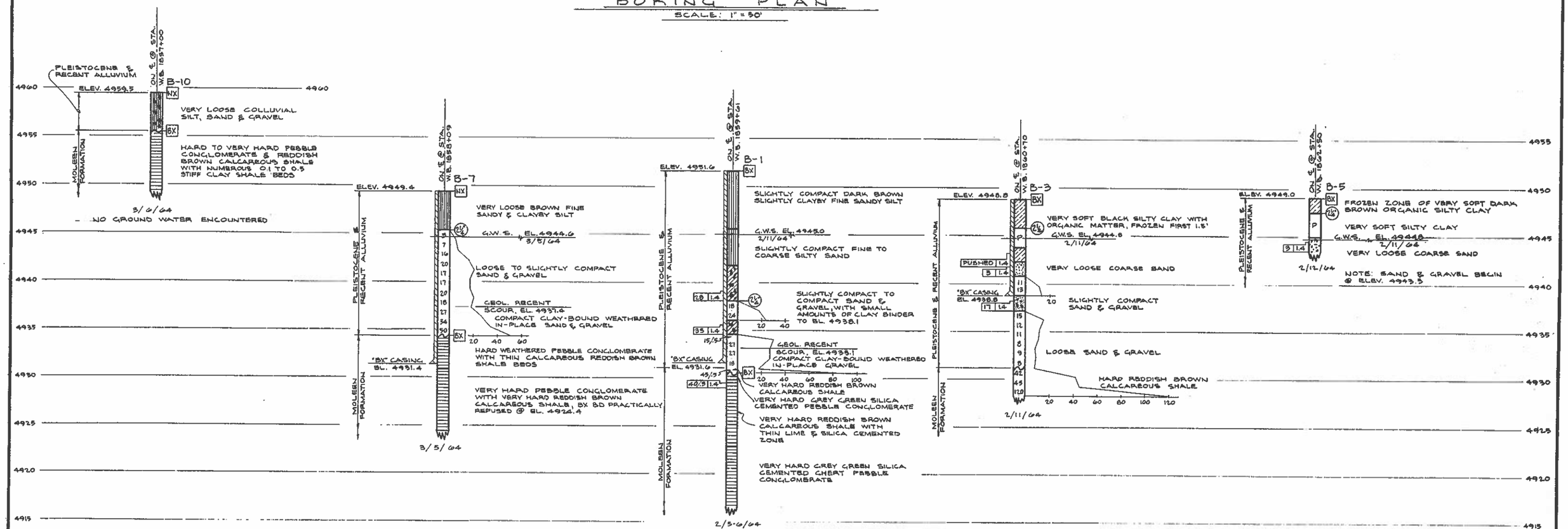

BORING PROFILE

SCALE: HORIZ. = NONE
VERT. = 1" = 5'

LEGEND OF DRILLING, SAMPLING & TESTING OPERATIONS

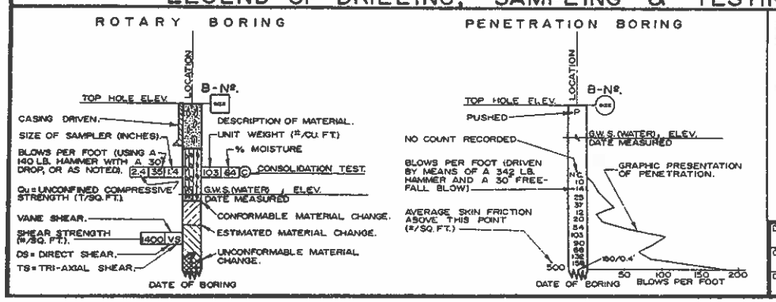

- PLAN OF ANY BORING
- PENETROMETER (FLUSH-COUPLED)
- 2½" CONE PENETROMETER
- SAMPLER BORING (DRY)
- ROTARY BORING (WET)
- AUGER BORING (DRY)
- JET BORING
- DIAMOND CORE BORING.
- TEST PIT.

BIT SIZES: (O.D.): "AX" = 1 13/16", "BX" = 2 9/32", "NX" = 2 29/32".
CASING SIZES: (O.D.): "BX" = 2 7/8", "NX" = 3 ½".

THE UNIFIED SOIL CLASSIFICATION SYSTEM

MAJ. DIV.		LETTER	SYMBOL	NAME
COARSE GRAINED MATERIAL	GRAVEL AND GRAVELLY SOIL	GW		WELL-GRADED GRAVEL OR GRAVEL-SAND MIXTURES, LITTLE OR NO FINES.
		GP		POORLY-GRADED GRAVEL OR GRAVEL-SAND MIXTURES, LITTLE OR NO FINES.
		GM		SILTY GRAVEL, GRAVEL-SAND-SILT MIXTURES.
		GC		CLAYEY GRAVEL, GRAVEL-SAND-CLAY MIXTURES.
	SAND AND SANDY SOIL	SW		WELL-GRADED SAND OR GRAVELLY SAND, LITTLE OR NO FINES
		SP		POORLY-GRADED SAND OR GRAVELLY SAND, LITTLE OR NO FINES
		SM		SILTY SAND, SAND-SILT MIXTURES.
		SC		CLAYEY SAND, SAND-SILT MIXTURES.

MAJ. DIV.		LETTER	SYMBOL	NAME
FINE GRAINED SOIL	SILTS AND CLAYS LL<50	ML		INORGANIC SILT AND VERY FINE SAND, ROCK FLOUR, SILTY OR CLAYEY FINE SAND OR CLAYEY SILT WITH SLIGHT PLASTICITY
		CL		INORGANIC CLAY OF LOW TO MEDIUM PLASTICITY, GRAVELLY CLAY, SANDY CLAY, SILTY CLAY, LEAN CLAY.
		OL		ORGANIC SILT AND ORGANIC SILT-CLAY OF LOW PLASTICITY.
	SILTS AND CLAYS LL>50	MH		INORGANIC SILT, MICACEOUS OR DIATOMACEOUS FINE SANDY OR SILTY SOILS, ELASTIC SILT.
		CH		INORGANIC CLAY OF HIGH PLASTICITY, FAT CLAY.
		OH		ORGANIC CLAY OF MEDIUM TO HIGH PLASTICITY, ORGANIC SILT.
HIGHLY ORGANIC SOILS		PT		PEAT AND OTHER HIGHLY ORGANIC SOILS.

ROCK CLASSIFICATION

SYMBOL	NAME
	IGNEOUS ROCK
	SEDIMENTARY ROCK
	METAMORPHIC ROCK

NOTE: CLASSIFICATION OF EARTH MATERIAL SHOWN ON THIS SHEET IS BASED UPON FIELD INSPECTION UNLESS NOTED OTHERWISE.

SOIL CONSISTENCY CLASSIFICATION

CONSISTENCY		* BLOWS PER FT.
GRANULAR	COHESIVE	
VERY LOOSE	VERY SOFT	0 TO 5
LOOSE	SOFT	5 TO 10
SLIGHTLY COMPACT	STIFF	10 TO 20
COMPACT	VERY STIFF	20 TO 35
DENSE	HARD	35 TO 70
VERY DENSE	VERY HARD	70

* (STANDARD PENETRATION TEST) BLOWS PER FT. (140 LB. HAMMER, 30" FREE-FALL BLOW USING A 2" O.D. x 1⅜" I.D. SAMPLER).

DWN. L.R.C.
CHK. C. H.
DATE: MAY 1964

REG. CIVIL ENG. NO. 1158
ENGINEERING GEOLOGIST

CLAIR A. HILL & ASSOCIATES
FOUNDATION ENGINEERING & TESTING LABORATORY
1525 COURT STREET
REDDING, CALIFORNIA

LOG OF TEST BORINGS
HUMBOLDT RIVER CROSSING NO. 4
STATE OF NEVADA
CARSON CITY NEVADA

DWG. NO. C-1005-17
G-8

H1544

FED. ROAD REG. NO.	STATE	PROJECT NO.	COUNTY	CONTROL SECTION	STATE ROUTE	SHEET NO.	TOTAL SHEETS
7	NEVADA	I-080-4(25)285	ELKO	EL-081	1	B-1	

FC-1

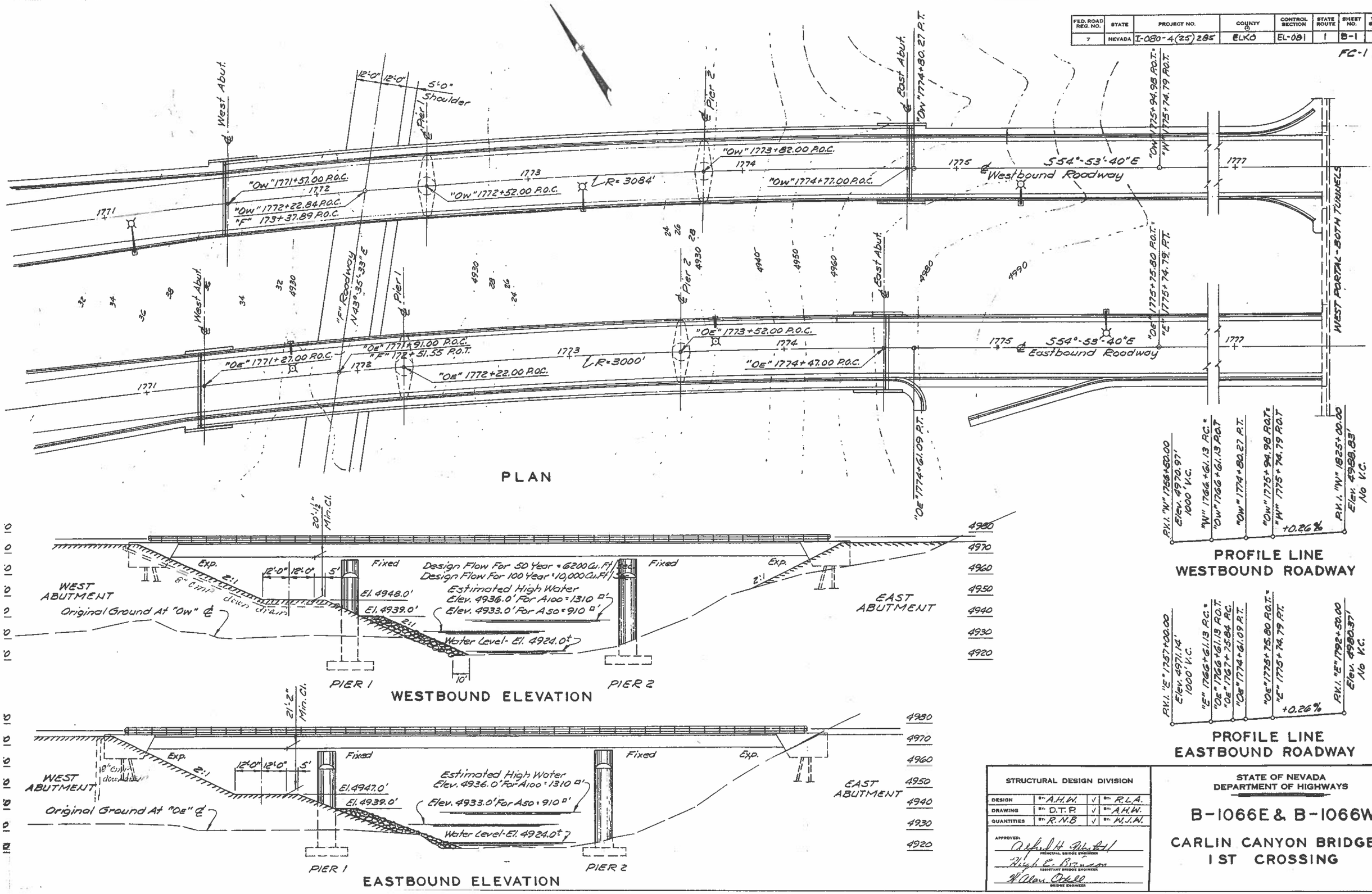

STRUCTURAL DESIGN DIVISION			
DESIGN	BY: A.H.W.	✓	BY: R.L.A.
DRAWING	BY: D.T.P.	✓	BY: A.H.W.
QUANTITIES	BY: R.N.B.	✓	BY: W.J.W.

APPROVED:
Alfred H. Wastell
PRINCIPAL BRIDGE ENGINEER
Hugh E. Brinson
ASSISTANT BRIDGE ENGINEER
W. Alan Ockell
BRIDGE ENGINEER

STATE OF NEVADA
DEPARTMENT OF HIGHWAYS

B-1066E & B-1066W

CARLIN CANYON BRIDGES 1ST CROSSING

FED. ROAD REG. NO.	STATE	PROJECT NO.	COUNTY	CONTROL SECTION	STATE ROUTE	SHEET NO.	TOTAL SHEETS
7	NEVADA	I-080-4(25)285	ELKO	EL-081	1	B-2	

FC-2

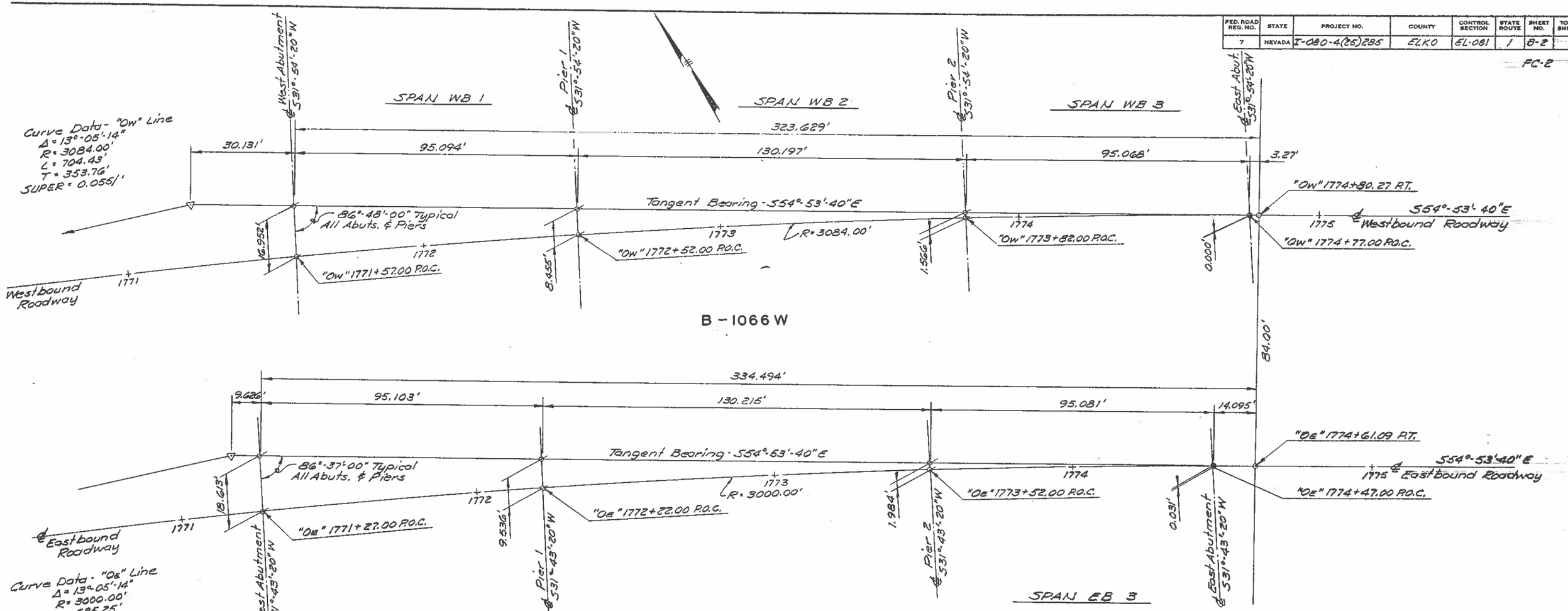

B - 1066 E

— QUANTITIES —

ITEM	UNIT	1066-E QUAN.	1066-W QUAN.	1066-W (NON-PARTICIPATING) QUAN.
TRUCTURE EXCAVATION	C.Y.	1097.0	1220.0	
ACKFILL	C.Y.	802.0	916.0	
LASS AA CONCRETE (MAJOR)	C.Y.	562.0	560.1	5.9
TEEL REINFORCED ELASTOMERIC PANSION JT. SEAL 2" MOVEMENT	LIN. FT.	72.5	72.5	
INFORCING STEEL	LBS.	199,891.0	188,644.0	11,729.0
RUCTURAL STEEL	LBS.	276,436.0	276,436.0	
EDESTRIAN RAIL TYPE "R"	LIN. FT.	321.3		321.3
LASS AA CONC. MODIFIED (MAJOR)	C.Y.	347.0	313.3	33.7
IRNISH STEEL PILES	LIN. FT.	858.4	890.3	
RIVE STEEL PILES	EACH	20	20	
PLICES	EACH	5	5	

— GENERAL NOTES —

1. DESIGN SPECIFICATIONS: AASHO "STANDARD SPECIFICATIONS FOR HIGHWAY BRIDGES, 1961," AND "INTERIM SPECIFICATIONS THROUGH 1965."
2. CONSTRUCTION SPECIFICATIONS: STATE OF NEVADA DEPARTMENT OF HIGHWAY "STANDARD SPECIFICATIONS FOR ROAD AND BRIDGE CONSTRUCTION, 1968," EXCEPT AS NOTED BELOW, AND IN THE SPECIAL PROVISIONS FOR THIS CONTRACT.
3. LIVE LOAD: STANDARD HS 20 - 44 OR ALTERNATE LOADING.
4. CONCRETE: ALL CONCRETE SHALL BE CLASS AA MAJOR EXCEPT FOR THE STRUCTURES DECK SECTION WHICH SHALL BE CLASS AA MODIFIED, 4,000 POUNDS PER SQUARE INCH CONCRETE AT 28 DAYS.
5. REINFORCING STEEL: ALL REINFORCING STEEL IS ASTM A615 GRADE 60. DIMENSIONS ARE TO CENTER OF BARS UNLESS OTHERWISE NOTED. BAR SIZES THREE (3) TO NINE (9) ARE INDICATED BY THE FIRST NUMBER IN THE MARK, TEN (10) OR LARGER BY THE FIRST TWO NUMBERS.
6. STRUCTURAL STEEL: ALL STRUCTURAL STEEL MEMBERS TO BE ASTM A36 STEEL UNLESS OTHERWISE NOTED.
7. CAMBER: THE CAMBER SHALL BE AS SHOWN ON THE PLANS.
8. PILING: ALL PILING TO BE 10-BP-42 H PILES. MINIMUM BEARING VALUE IS 45 TONS PER PILE.
9. PILE DRIVING: THE ENGINEERING NEWS FORMULA P=2E/(S+0.1) SHALL BE USED TO DETERMINE THE BEARING VALUE OF THE PILES EXCEPT WHERE LOAD TESTS ARE REQUIRED. TERMS P, E, AND S ARE DEFINED IN ARTICLE 508.03.05 OF THE CONSTRUCTION SPECIFICATIONS.
10. SPREAD FOOTINGS: MAXIMUM BEARING VALUE FOR PIER FOOTING IS TEN (10) TONS PER SQUARE FOOT. THE BOTTOM OF ALL FOOTINGS SHALL EXTEND TO A DEPTH OF A MINIMUM OF TWO (2) FEET BELOW THE BEDROCK SURFACE. EXCAVATION SHOULD CONFORM TO THE LIMIT LINES OF THE FOOTING BLOCK THROUGHOUT THE BEDROCK EXCAVATION DEPTH, AND FOOTING BLOCKS SHOULD BE POURED NEAT AGAINST THE ROCK. ANY INCREASE THERE IS IN THE QUANTITIES FROM PROVIDING THE TWO (2) FOOT MINIMUM DEPTH INTO THE BEDROCK SHALL BE PAID FOR AT CONTRACT UNIT PRICES.
11. PEDESTRIAN RAILING: PEDESTRIAN RAILING TO BE PEDESTRIAN RAIL TYPE R.
12. FINE SURFACE FINISH: SURFACES REQUIRING A FINE FINISH ARE DESIGNATED ON THE PLANS BY THE ABBREVIATION "FSF."
13. CONSTRUCTION TYPE CODE: XXI.

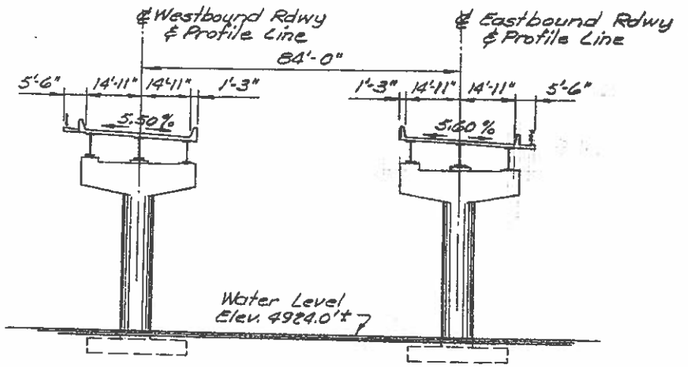

SECTION NORMAL TO I-80

STATE OF NEVADA
DEPARTMENT OF HIGHWAYS

B - 1066E & B - 1066W

STRUCTURE GEOMETRICS AND GENERAL NOTES

FED. ROAD REG. NO.	STATE	PROJECT NO.	COUNTY	CONTROL SECTION	STATE ROUTE	SHEET NO.	TOTAL SHEETS
7	NEVADA	I-080-4(25)285	ELKO	EL-081	1	B-9	

FC-3

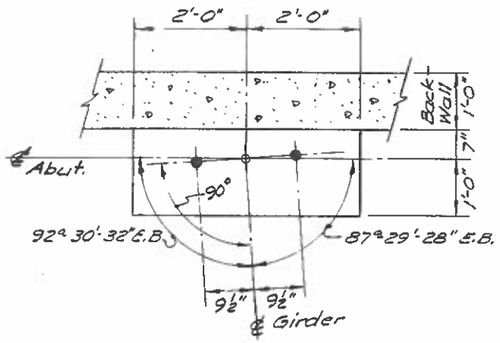

TYPICAL ANCHOR BOLT LAYOUT

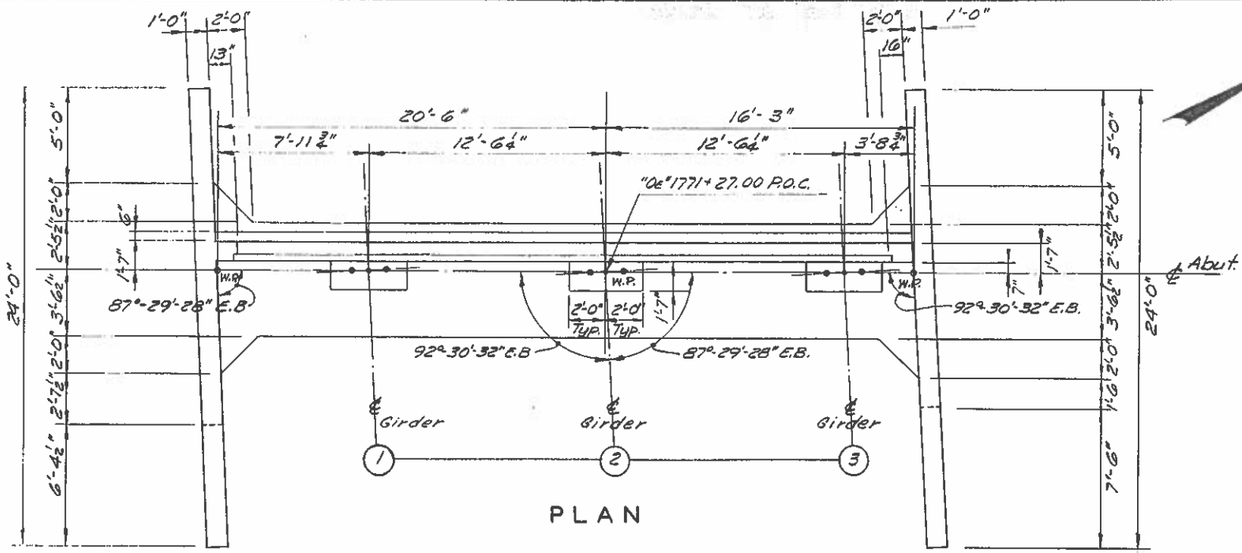

PLAN

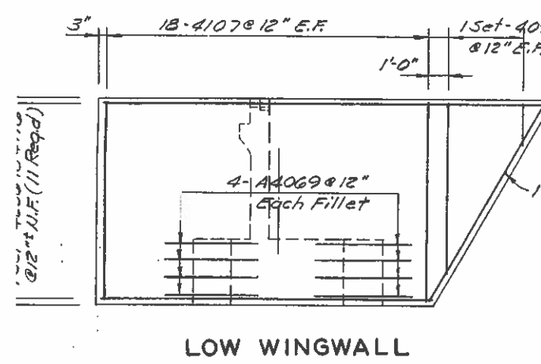

LOW WINGWALL

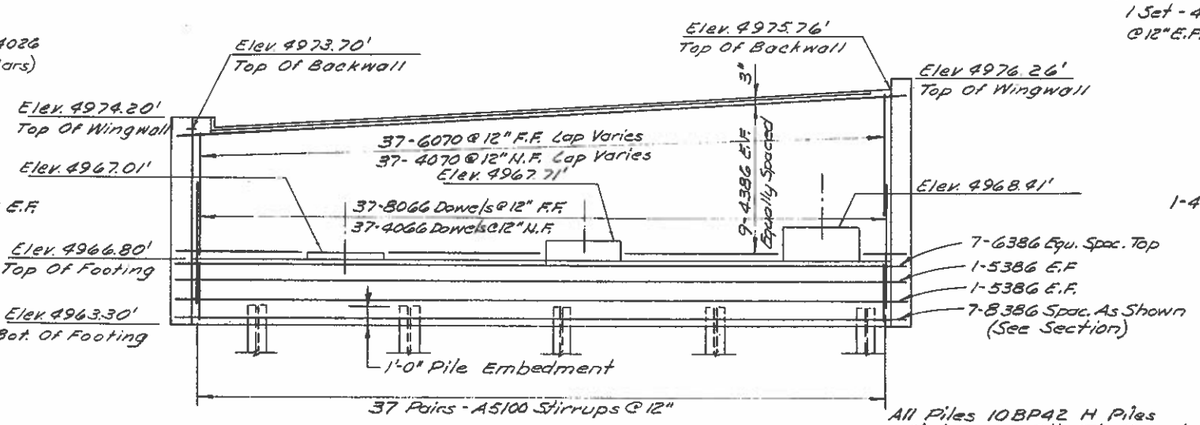

ELEVATION

All Piles 10BP42 H Piles
Minimum Pile Tip Penetration Elev. 4925.0'
Design Pile Tip Penetration Elev. 4910.0'
Elev. 4916.0' Used For Furnish Steel Pile Estimate.
45 Tons Per Pile

Wingwalls and Backwall From Top of Footing Up Shall Be Poured After The Structural Steel Is In Place.

Slope Top of Wingwalls With Roadway Grade.

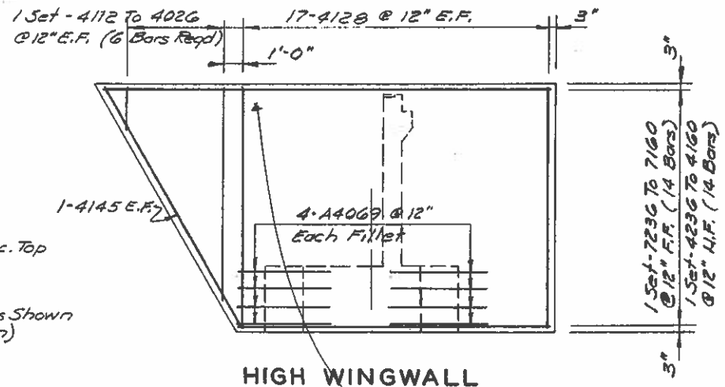

HIGH WINGWALL

"F5F" All Exposed Concrete Wingwall Surfaces To 1'-0" Below Finished Grade.

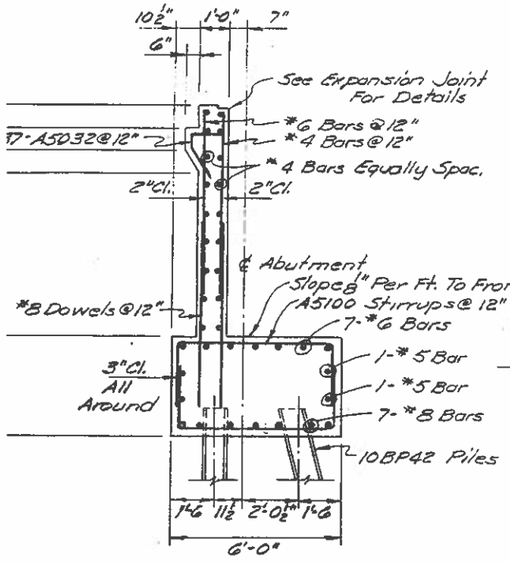

TYPICAL SECTION

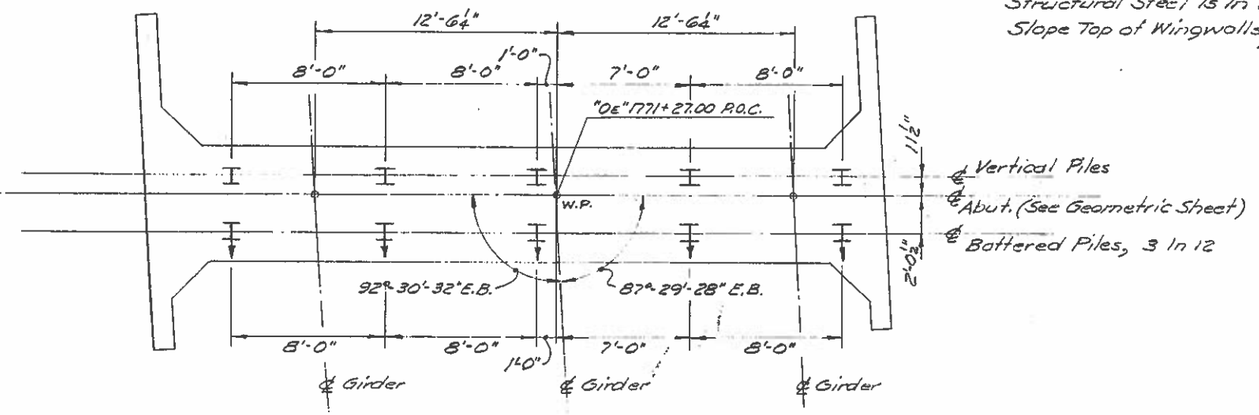

PILE PLAN

Piles Shown Thus I Are Vertical
Piles Shown Thus ⊥ Are Battered 3 In 12.

STATE OF NEVADA
DEPARTMENT OF HIGHWAYS

B-1066 E

WEST ABUTMENT DETAILS AND REINFORCING

FED. ROAD REG. NO.	STATE	PROJECT NO.	COUNTY	CONTROL SECTION	STATE ROUTE	SHEET NO.	TOTAL SHEETS
7	NEVADA	I-080-4(25)285	ELKO	EL-081	1	B-4	

FC-4

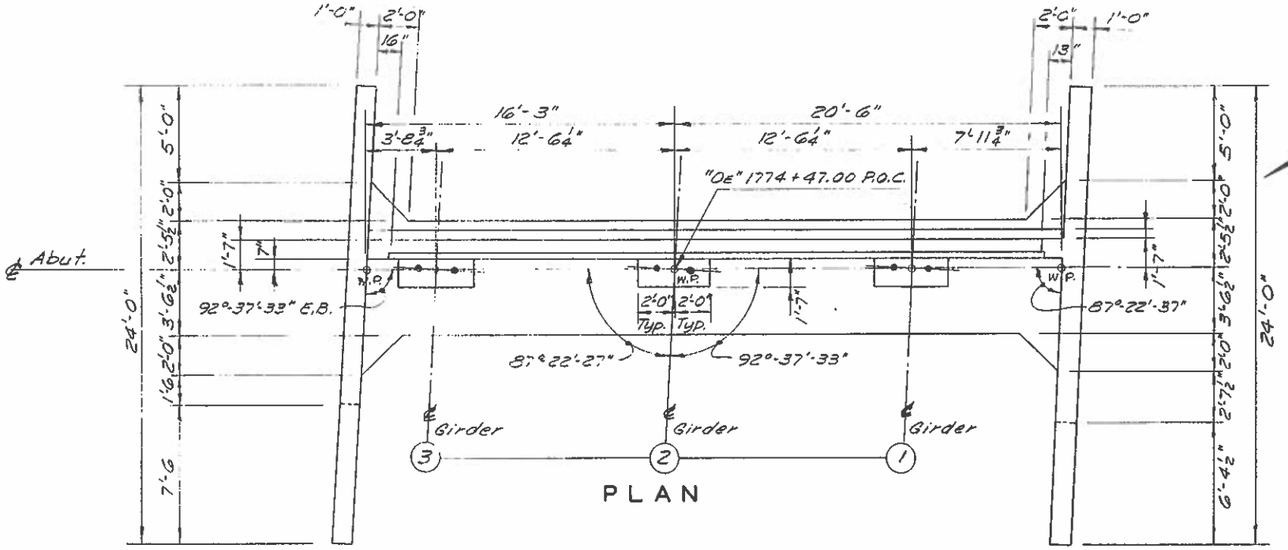

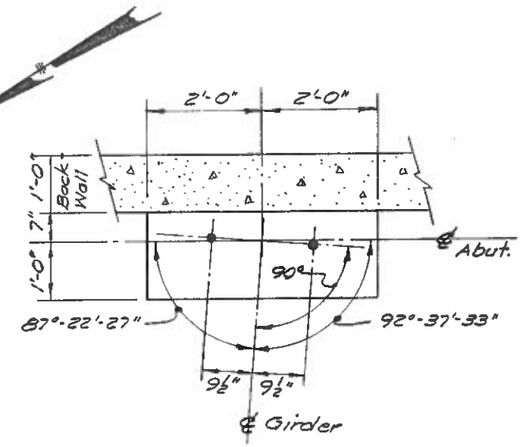

TYPICAL ANCHOR BOLT

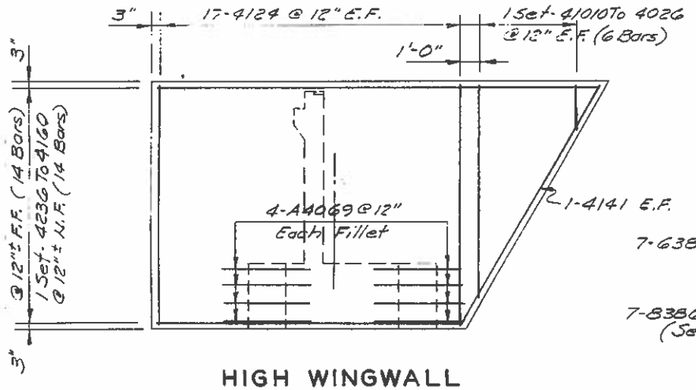

HIGH WINGWALL

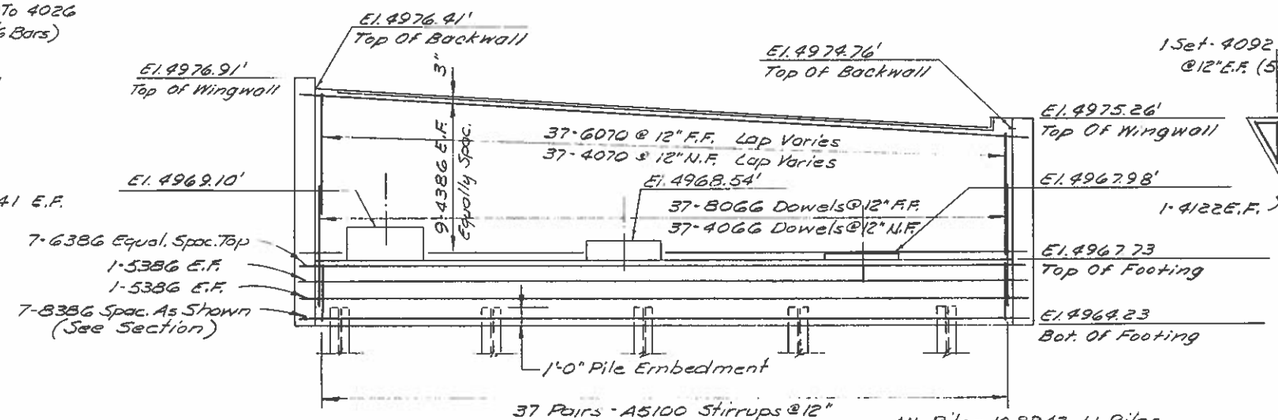

ELEVATION

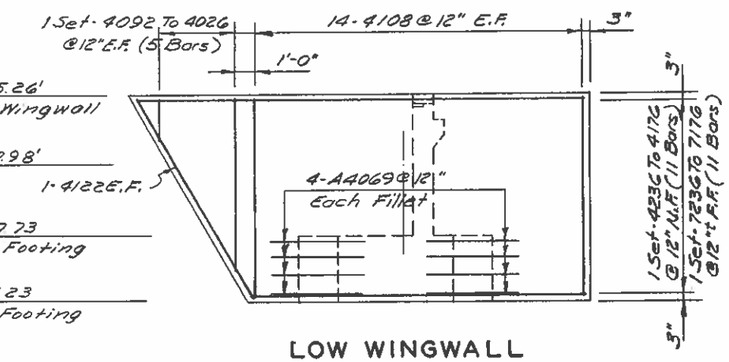

LOW WINGWALL

All Piles 10 BP42 H Piles
Minimum Pile Tip Penetration Elev. 4935.0'
Design Pile Tip Penetration Elev. 4920.0'
Elev. 4926.0' Used For Furnish Steel Pile Estimate, 45 Tons Per Pile
Reinforce Lower 2-3 Feet of Pile
Wingwalls and Backwall From Top of Footing Up Shall Be Poured After The Structural Steel Is In Place.

Slope Top of Wingwalls With Roadway Grade.

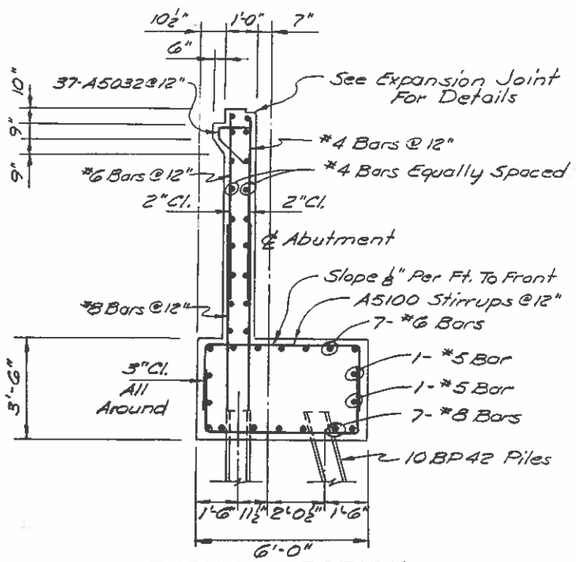

TYPICAL SECTION

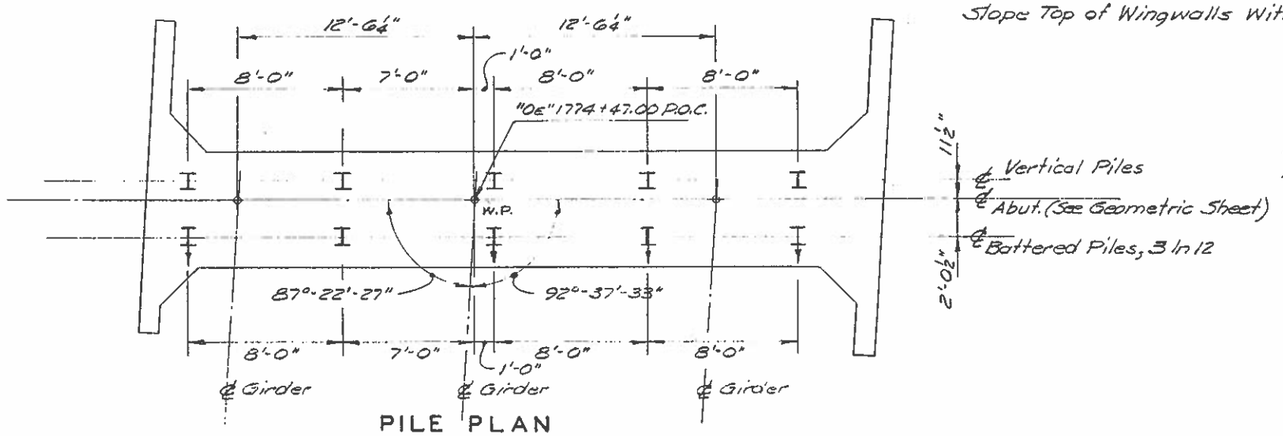

PILE PLAN

Piles Shown Thus I Are Vertical
Piles Shown Thus ⫲ Are Battered 3 In 12

STATE OF NEVADA
DEPARTMENT OF HIGHWAYS

B-1066E

EAST ABUTMENT DETAILS AND REINFORCING

FED. ROAD REG. NO.	STATE	PROJECT NO.	COUNTY	CONTROL SECTION	STATE ROUTE	SHEET NO.	TOTAL SHEETS
7	NEVADA	I-080-4(25)285	ELKO	EL-081	1	B-5	

FC-5

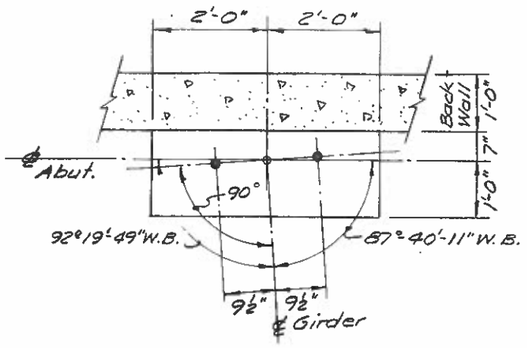

TYPICAL ANCHOR BOLT LAYOUT

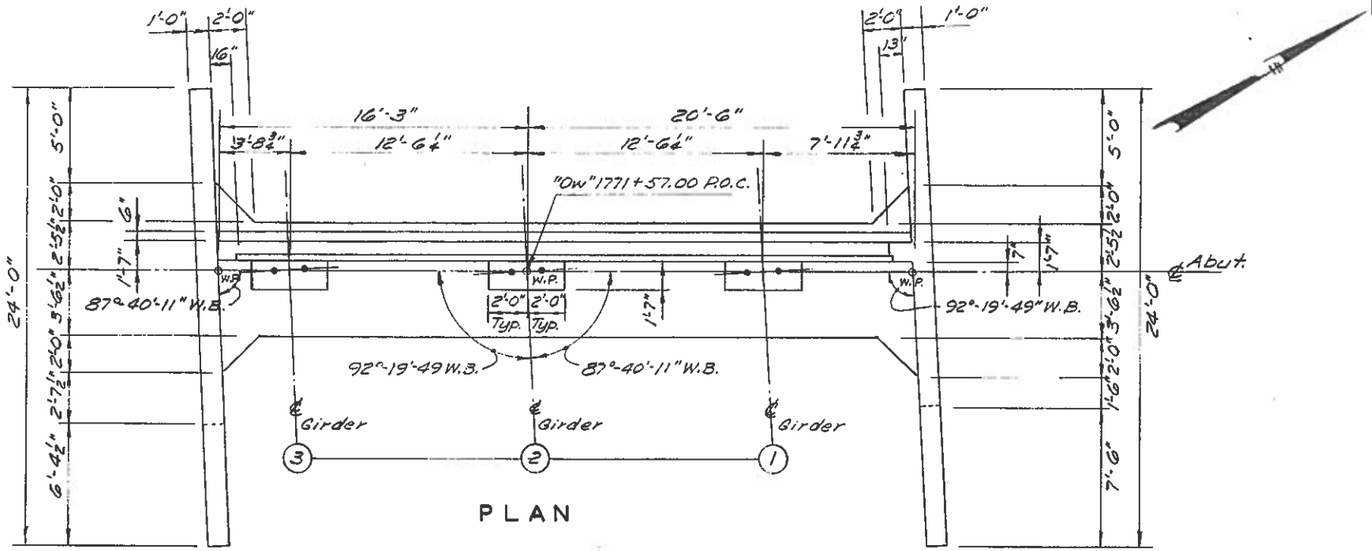

PLAN

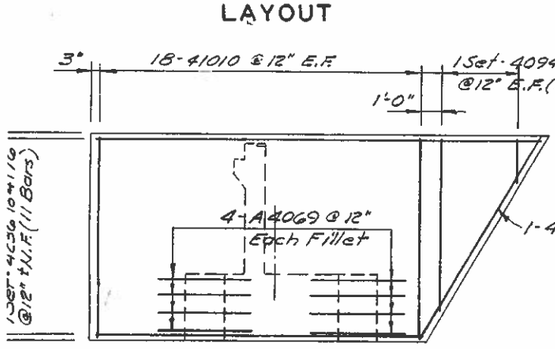

LOW WINGWALL

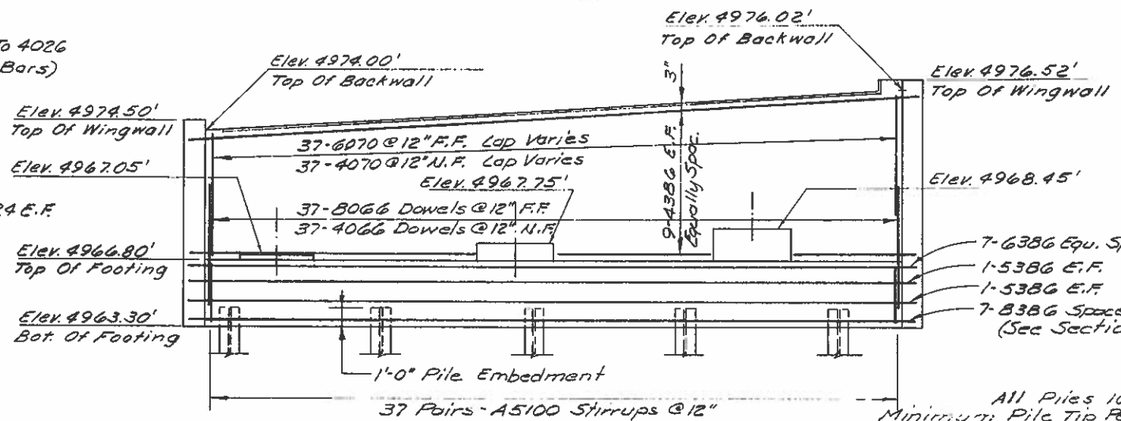

ELEVATION

All Piles 10BP42 H Piles
Minimum Pile Tip Penetration Elev. 4925.0'
Design Pile Tip Penetration Elev. 4910.0'
Elev. 4916.0' Used For Furnish Steel Pile Estimate
45 Tons Per Pile

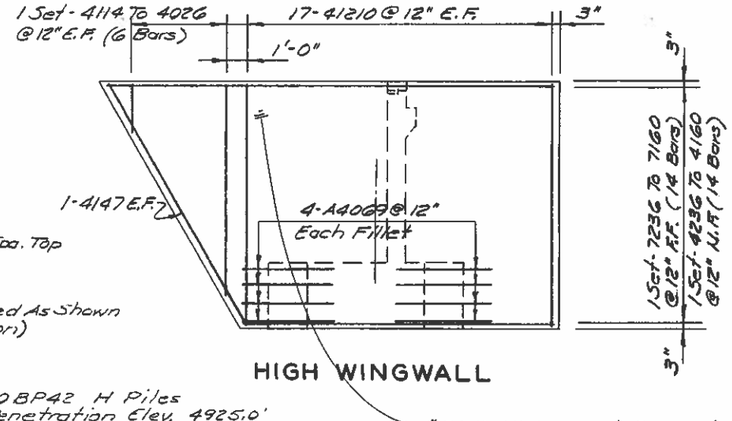

HIGH WINGWALL

"F5F" All Exposed Concrete Wingwall Surfaces To 1'-0" Below Finished Grade.

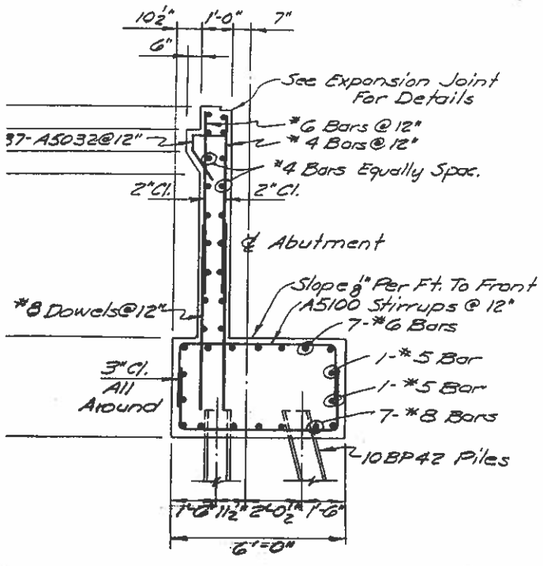

TYPICAL SECTION

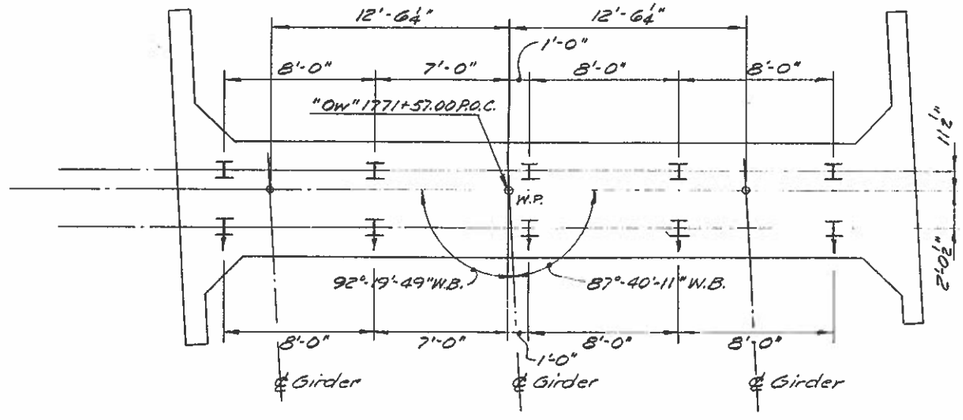

PILE PLAN

Wingwalls and Backwall From Top of Footing Up Shall Be Poured After The Structural Steel Is In Place.

Slope Top of Wingwalls With Roadway Grade.

℄ Vertical Piles
℄ Abut. (See Geometric Sheet)
℄ Battered Piles, 3 In 12

Piles Shown Thus I Are Vertical
Piles Shown Thus ⊥ Are Battered 3 In 12.

STATE OF NEVADA
DEPARTMENT OF HIGHWAYS

B-1066 W

WEST ABUTMENT DETAILS AND REINFORCING

FED. ROAD REG. NO.	STATE	PROJECT NO.	COUNTY	CONTROL SECTION	STATE ROUTE	SHEET NO.	TOTAL SHEETS
7	NEVADA	I-080-4(25)285	ELKO	EL-081	1	B-6	

FC-6

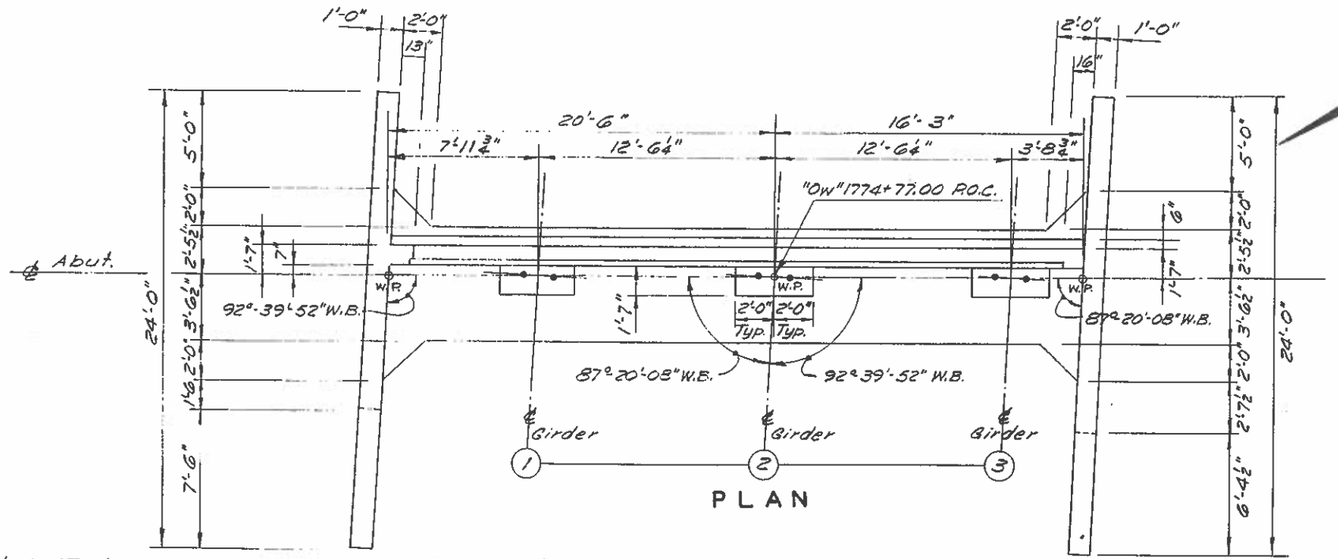

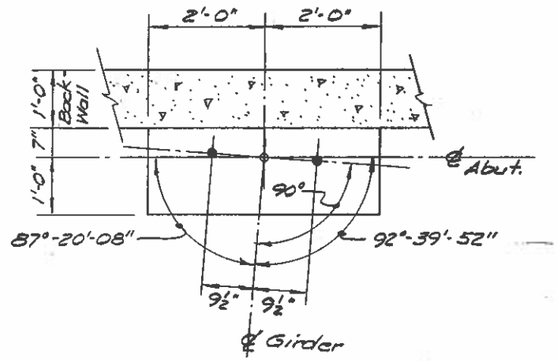

TYPICAL ANCHOR BOLT

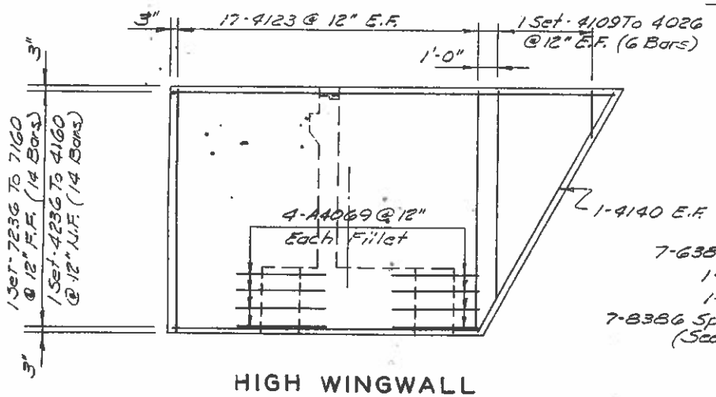

HIGH WINGWALL

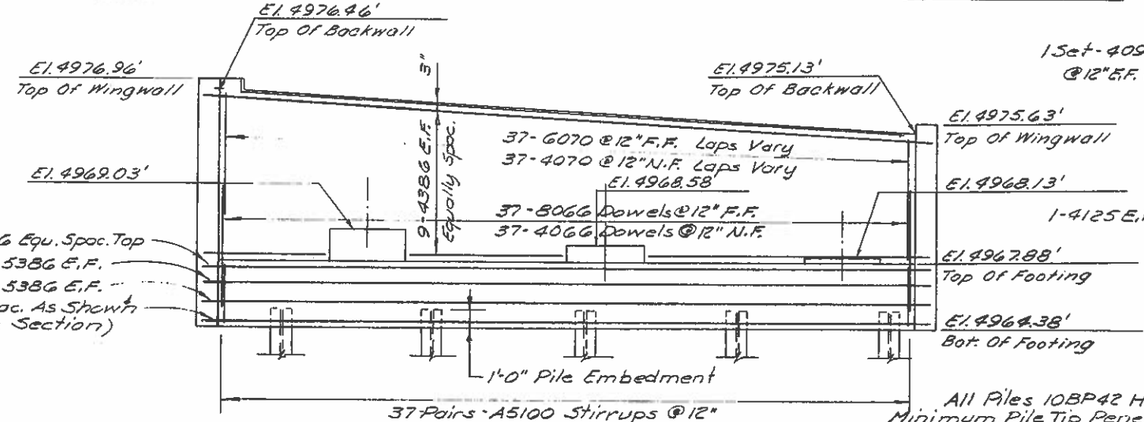

ELEVATION

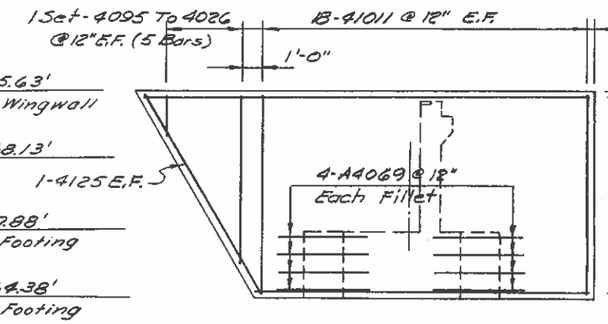

LOW WINGWALL

All Piles 10BP42 H Piles
Minimum Pile Tip Penetration Elev. 4940.0'
Design Pile Tip Penetration Elev. 4925.0'
Elev. 4926.0' Used For Furnish Steel Pile Estimate
Reinforce Lower 2-3 Feet of Pile.
45 Tons Per Pile.

Wingwalls and Backwall From Top of Footing Up Shall Be Poured After The Structural Steel Is In Place.

Slope Top of Wingwalls With Roadway Grade

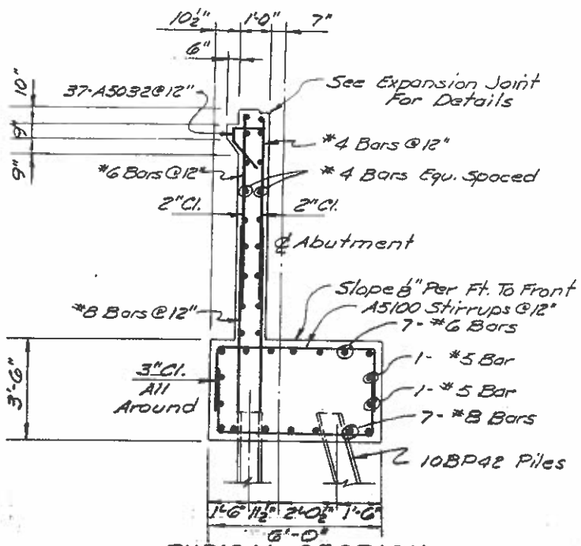

TYPICAL SECTION

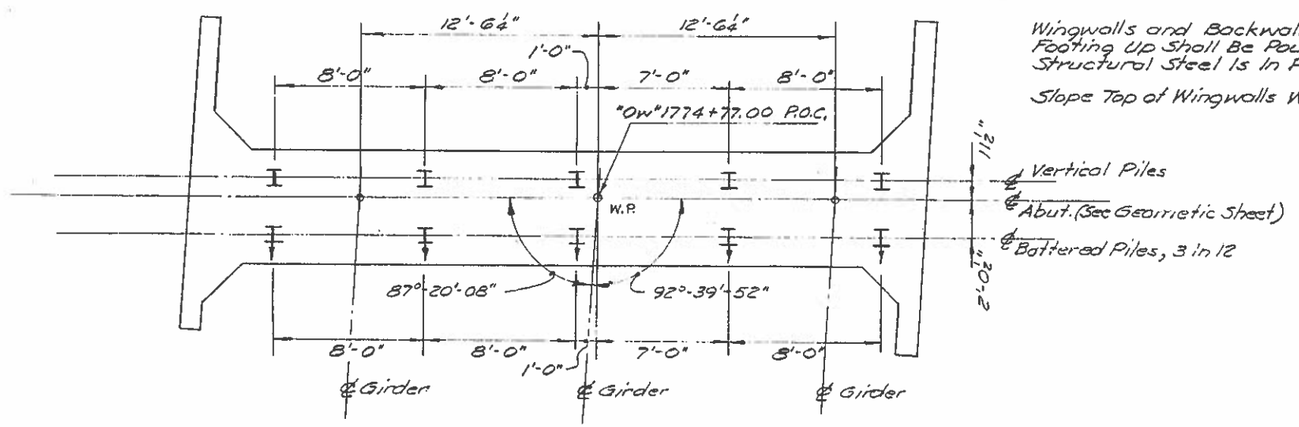

PILE PLAN

Piles Shown Thus I Are Vertical
Piles Shown Thus ⫿ Are Battered 3 In 12

STATE OF NEVADA
DEPARTMENT OF HIGHWAYS

B-1066W

EAST ABUTMENT DETAILS AND REINFORCING

FED. ROAD REG. NO.	STATE	PROJECT NO.	COUNTY	CONTROL SECTION	STATE ROUTE	SHEET NO.	TOTAL SHEETS
I-80	NEVADA	I-080-4(25)285	ELKO	EL-061	1	B-23	

FC-23

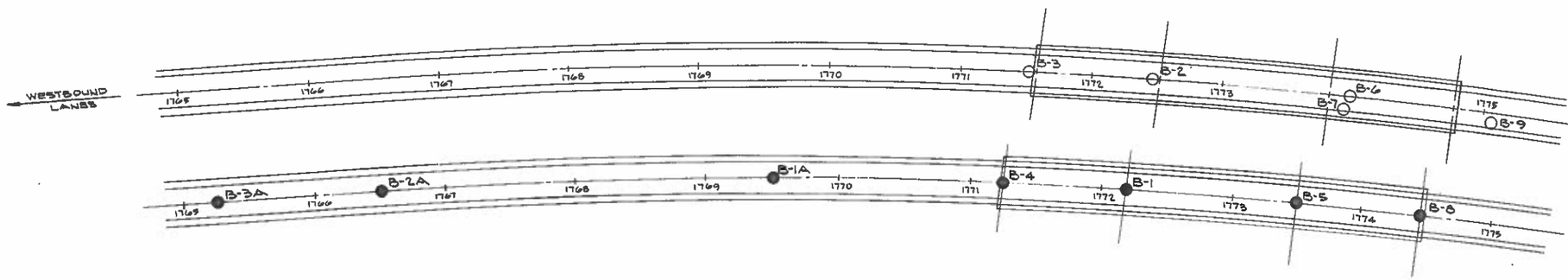

BORING PLAN

SCALE: 1"=50'

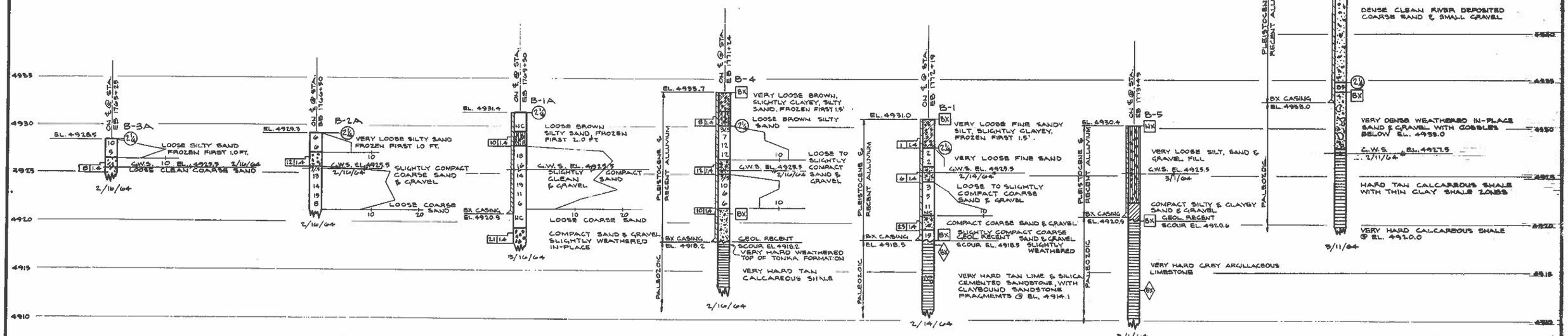

BORING PROFILE

SCALE: HORIZ. NONE
VERT. 1" = 5'

LEGEND OF DRILLING, SAMPLING & TESTING OPERATIONS

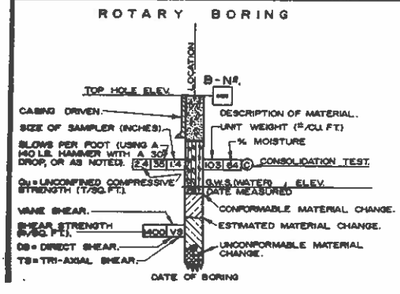

- PLAN OF ANY BORING
- PENETROMETER (FLUSH-COUPLED)
- 2 1/4" CONE PENETROMETER
- SAMPLER BORING (DRY)
- ROTARY BORING (WET)
- AUGER BORING (DRY)
- JET BORING
- DIAMOND CORE BORING.
- TEST PIT.

BIT SIZES; (O.D.): "AX" = 1 13/16", "BX" = 2 3/32", "NX" = 2 29/32".
CASING SIZES; (O.D.): "BX" = 2 7/8", "NX" = 3 1/2".

THE UNIFIED SOIL CLASSIFICATION SYSTEM

MAJ. DIV.		LETTER	SYMBOL	NAME
COARSE GRAINED MATERIAL	GRAVEL AND GRAVELLY SOIL	GW		WELL-GRADED GRAVEL OR GRAVEL-SAND MIXTURES, LITTLE OR NO FINES.
		GP		POORLY-GRADED GRAVEL OR GRAVEL-SAND MIXTURES, LITTLE OR NO FINES.
		GM		SILTY GRAVEL, GRAVEL-SAND-SILT MIXTURES.
		GC		CLAYEY GRAVEL, GRAVEL-SAND-CLAY MIXTURES.
	SAND AND SANDY SOIL	SW		WELL-GRADED SAND OR GRAVELLY SAND, LITTLE OR NO FINES
		SP		POORLY-GRADED SAND OR GRAVELLY SAND, LITTLE OR NO FINES
		SM		SILTY SAND, SAND-SILT MIXTURES.
		SC		CLAYEY SAND, SAND-SILT MIXTURES.

MAJ. DIV.		LETTER	SYMBOL	NAME
FINE GRAINED SOIL	SILTS AND CLAYS LL<50	ML		INORGANIC SILT AND VERY FINE SAND, ROCK FLOUR, SILTY OR CLAYEY FINE SAND OR CLAYEY SILT WITH SLIGHT PLASTICITY
		CL		INORGANIC CLAY OF LOW TO MEDIUM PLASTICITY, GRAVELLY CLAY, SANDY CLAY, SILTY CLAY, LEAN CLAY.
		OL		ORGANIC SILT AND ORGANIC SILT-CLAY OF LOW PLASTICITY.
	SILTS AND CLAYS LL>50	MH		INORGANIC SILT, MICACEOUS OR DIATOMACEOUS FINE SANDY OR SILTY SOILS, ELASTIC SILT.
		CH		INORGANIC CLAY OF HIGH PLASTICITY, FAT CLAY.
		OH		ORGANIC CLAY OF MEDIUM TO HIGH PLASTICITY, ORGANIC SILT.
HIGHLY ORGANIC SOILS		PT		PEAT AND OTHER HIGHLY ORGANIC SOILS.

ROCK CLASSIFICATION

SYMBOL	NAME
	IGNEOUS ROCK
	SEDIMENTARY ROCK
	METAMORPHIC ROCK

NOTE: CLASSIFICATION OF EARTH MATERIAL SHOWN ON THIS SHEET IS BASED UPON FIELD INSPECTION UNLESS NOTED OTHERWISE.

SOIL CONSISTENCY CLASSIFICATION

CONSISTENCY		* BLOWS PER FT.
GRANULAR	COHESIVE	
VERY LOOSE	VERY SOFT	0 TO 5
LOOSE	SOFT	5 TO 10
SLIGHTLY COMPACT	STIFF	10 TO 20
COMPACT	VERY STIFF	20 TO 35
DENSE	HARD	35 TO 70
VERY DENSE	VERY HARD	70

* (STANDARD PENETRATION TEST) BLOWS PER FT. (140 LB. HAMMER, 30" FREE-FALL BLOW USING A 2" O.D. x 1 3/8" I.D. SAMPLER).

DWN. L. R. C.
CHK. L. D. P. & C. H.
DATE: APRIL, 1964

Clair A. Hill
REG. CIVIL ENG. NO. 1138
A. P. Harrod
ENGINEERING GEOLOGIST

CLAIR A. HILL & ASSOCIATES
FOUNDATION ENGINEERING & TESTING LABORATORY
1525 COURT STREET REDDING, CALIFORNIA

LOG OF TEST BORINGS
HUMBOLDT RIVER CROSSING No. 1
STATE OF NEVADA
CARSON CITY NEVADA

DWG. NO. K-1005.17
G-2

FED. ROAD REG. NO.	STATE	PROJECT NO.	COUNTY	CONTROL SECTION	STATE ROUTE	SHEET NO.	TOTAL SHEETS
I-80	NEVADA	I-080-4(25)285	ELKO	EL-081	1	B-24	

FC-24

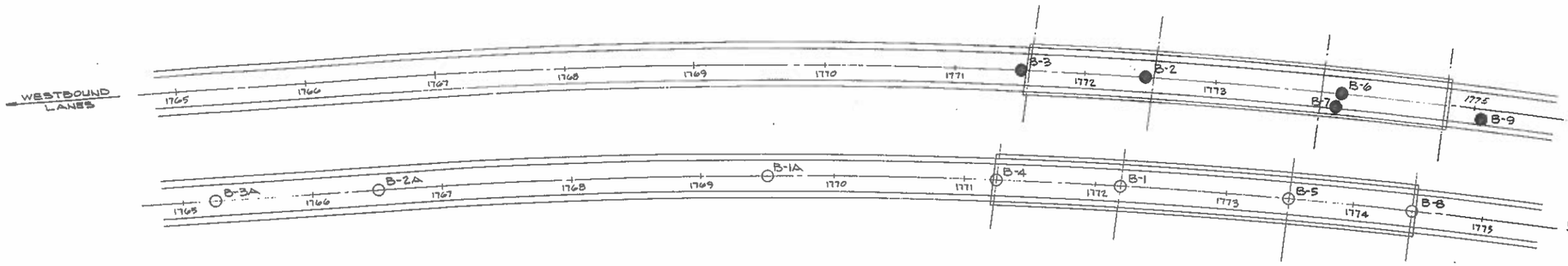

BORING PLAN

SCALE: 1" = 50'

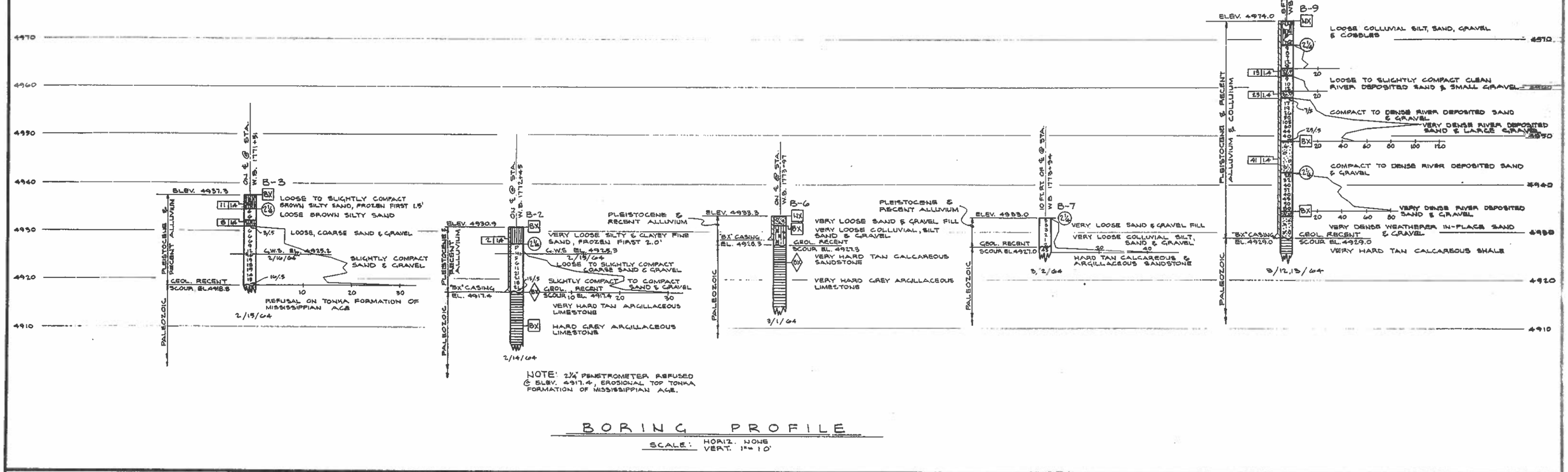

BORING PROFILE

SCALE: HORIZ. NONE
VERT. 1" = 10'

LEGEND OF DRILLING, SAMPLING & TESTING OPERATIONS

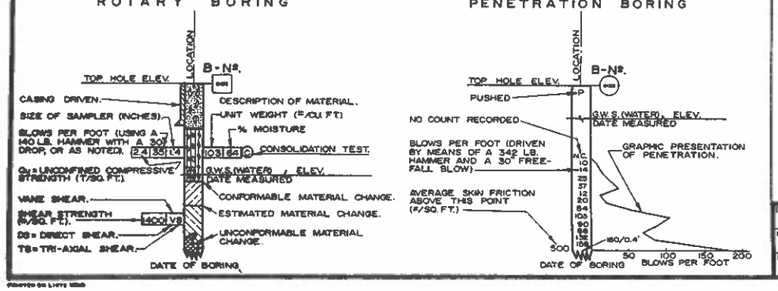

- PLAN OF ANY BORING
- PENETROMETER (FLUSH-COUPLED)
- 2 ¼" CONE PENETROMETER
- SAMPLER BORING (DRY)
- ROTARY BORING (WET)
- AUGER BORING (DRY)
- JET BORING
- DIAMOND CORE BORING.
- TEST PIT.

BIT SIZES; (O.D.): "AX" = 1 13/16", "BX" = 2 9/32", "NX" = 2 29/32".
CASING SIZES; (O.D.): "BX" = 2 7/8", "NX" = 3 ½".

THE UNIFIED SOIL CLASSIFICATION SYSTEM

MAJ. DIV.		LETTER	SYMBOL	NAME
COARSE GRAINED	GRAVEL AND GRAVELLY SOIL	GW		WELL-GRADED GRAVEL OR GRAVEL-SAND MIXTURES, LITTLE OR NO FINES.
		GP		POORLY-GRADED GRAVEL OR GRAVEL-SAND MIXTURES, LITTLE OR NO FINES.
		GM		SILTY GRAVEL, GRAVEL-SAND-SILT MIXTURES.
		GC		CLAYEY GRAVEL, GRAVEL-SAND-CLAY MIXTURES.
	SAND AND SANDY SOIL	SW		WELL-GRADED SAND OR GRAVELLY SAND, LITTLE OR NO FINES
		SP		POORLY-GRADED SAND OR GRAVELLY SAND, LITTLE OR NO FINES
		SM		SILTY SAND, SAND-SILT MIXTURES.
		SC		CLAYEY SAND, SAND-SILT MIXTURES.

MAJ. DIV.		LETTER	SYMBOL	NAME
FINE GRAINED SOIL	SILTS AND CLAYS LL<50	ML		INORGANIC SILT AND VERY FINE SAND, ROCK FLOUR, SILTY OR CLAYEY FINE SAND OR CLAYEY SILT WITH SLIGHT PLASTICITY
		CL		INORGANIC CLAY OF LOW TO MEDIUM PLASTICITY, GRAVELLY CLAY, SANDY CLAY, SILTY CLAY, LEAN CLAY.
		OL		ORGANIC SILT AND ORGANIC SILT-CLAY OF LOW PLASTICITY.
	SILTS AND CLAYS LL>50	MH		INORGANIC SILT, MICACEOUS OR DIATOMACEOUS FINE SANDY OR SILTY SOILS, ELASTIC SILT.
		CH		INORGANIC CLAY OF HIGH PLASTICITY, FAT CLAY.
		OH		ORGANIC CLAY OF MEDIUM TO HIGH PLASTICITY, ORGANIC SILT.
HIGHLY ORGANIC SOILS		PT		PEAT AND OTHER HIGHLY ORGANIC SOILS.

ROCK CLASSIFICATION

SYMBOL	NAME
	IGNEOUS ROCK
	SEDIMENTARY ROCK
	METAMORPHIC ROCK

NOTE: CLASSIFICATION OF EARTH MATERIAL SHOWN ON THIS SHEET IS BASED UPON FIELD INSPECTION UNLESS NOTED OTHERWISE.

SOIL CONSISTENCY CLASSIFICATION

CONSISTENCY		* BLOWS PER FT.
GRANULAR	COHESIVE	
VERY LOOSE	VERY SOFT	0 TO 5
LOOSE	SOFT	5 TO 10
SLIGHTLY COMPACT	STIFF	10 TO 20
COMPACT	VERY STIFF	20 TO 35
DENSE	HARD	35 TO 70
VERY DENSE	VERY HARD	70

* STANDARD PENETRATION TEST; BLOWS PER FT. (140 LB. HAMMER, 30" FREE-FALL BLOW USING A 2" O.D. x 1 3/8" I.D. SAMPLER).

DWN. L.R.C.
CHK. L.D.R. & C.H.
DATE. APRIL 1964

Clair Hill
REG. CIVIL ENG. NO. 11138
L.H. Hamel
ENGINEERING GEOLOGIST

CLAIR A. HILL & ASSOCIATES
FOUNDATION ENGINEERING & TESTING LABORATORY
1525 COURT STREET REDDING, CALIFORNIA

LOG OF TEST BORINGS
HUMBOLDT RIVER CROSSING No. 1
STATE OF NEVADA
CARSON CITY, NEVADA

DWG. NO. C-1009.17
G-3

FED. ROAD REG. NO.	STATE	PROJECT NO.	COUNTY	CONTROL SECTION	STATE ROUTE	SHEET NO.	TOTAL SHEETS
7	NEVADA	I-080-4(25)285	ELKO	EL-081	1	B-25	

SC-1

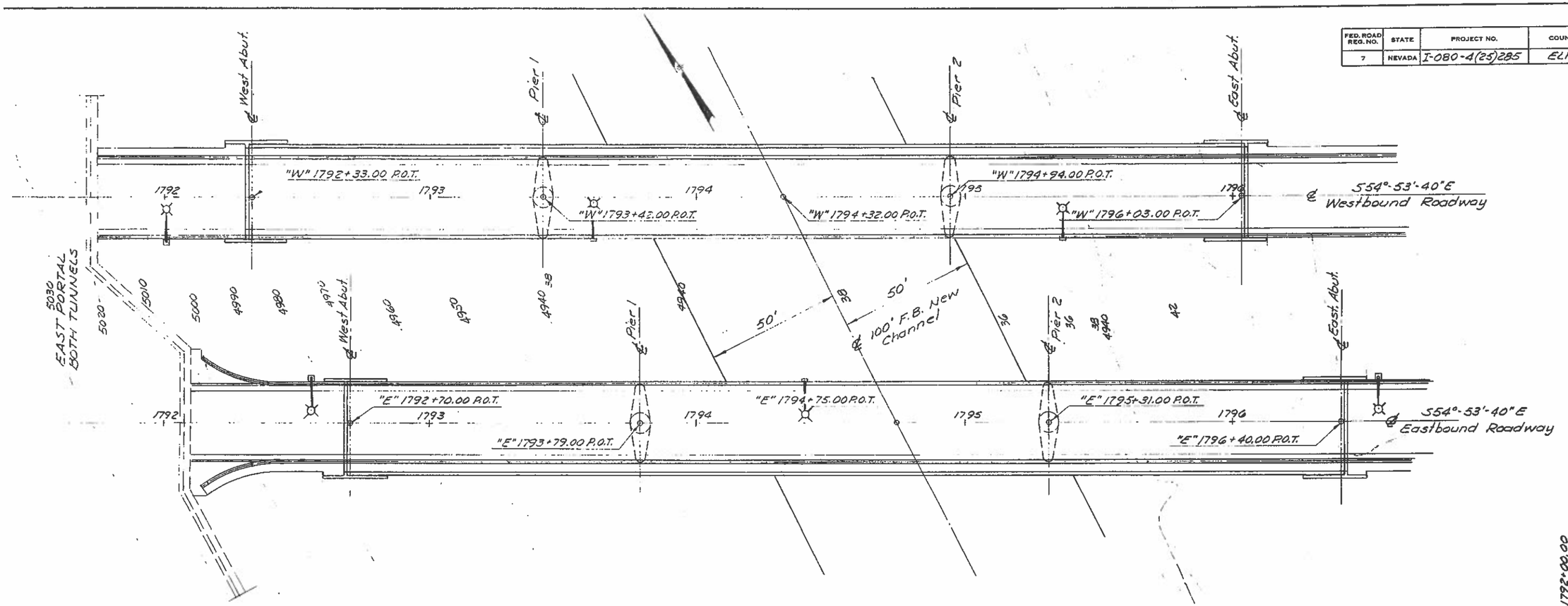

PLAN

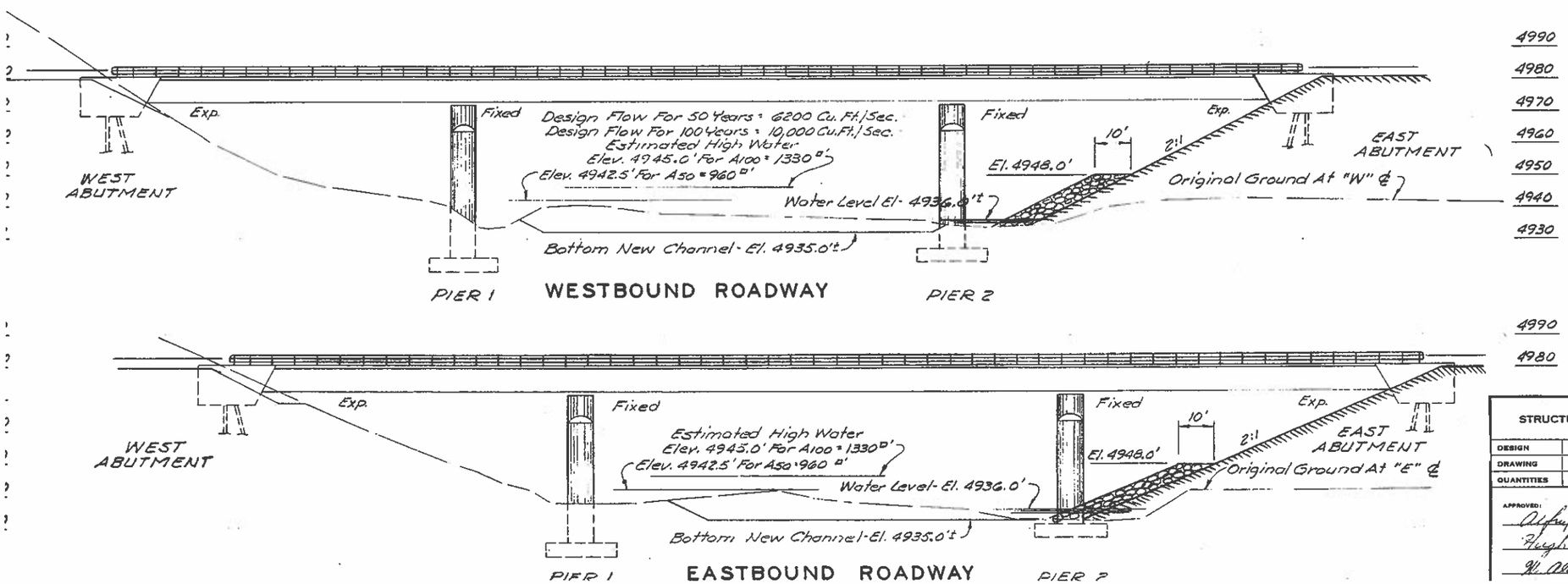

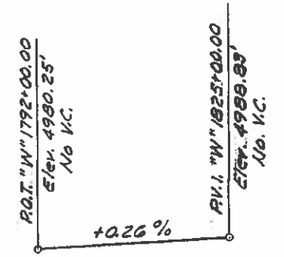

PROFILE LINE
WESTBOUND ROADWAY

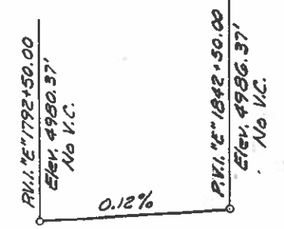

PROFILE LINE
EASTBOUND ROADWAY

STRUCTURAL DESIGN DIVISION			
DESIGN	BY: A.H.W.	✓	BY: R.L.A.
DRAWING	BY: D.T.P.	✓	BY: A.H.W.
QUANTITIES	BY: R.N.B.	✓	BY: W.J.W.

APPROVED:
Arthur H. Wilson
PRINCIPAL BRIDGE ENGINEER
Hugh E. Briner(s)
ASSISTANT BRIDGE ENGINEER
W. Alan Oder
BRIDGE ENGINEER

STATE OF NEVADA
DEPARTMENT OF HIGHWAYS

B-1111E & B-1111W

CARLIN CANYON BRIDGES 2ND CROSSING

FED. ROAD REG. NO.	STATE	PROJECT NO.	COUNTY	CONTROL SECTION	STATE ROUTE	SHEET NO.	TOTAL SHEETS
7	NEVADA	I-080-4(25)285	ELKO	EL-081	1	B-26	

SC-2

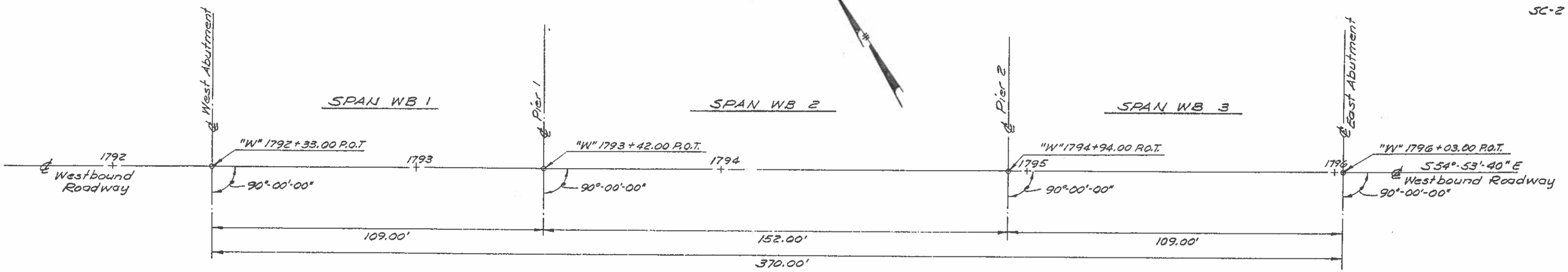

B-1111W

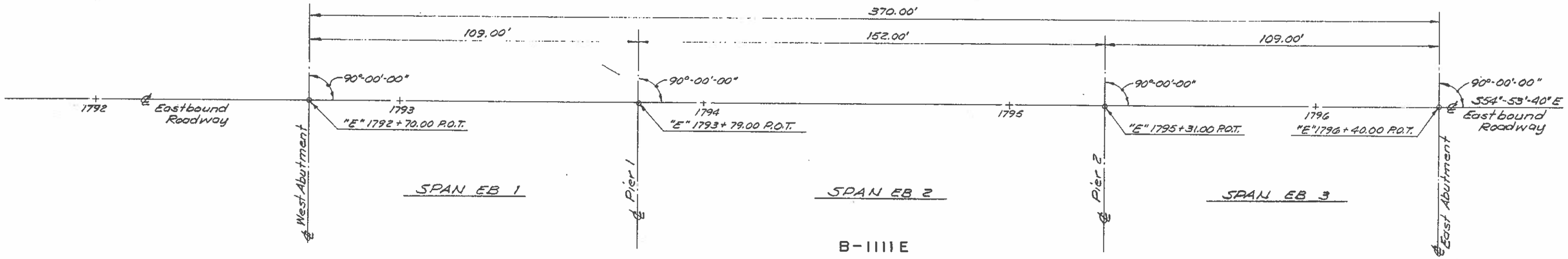

B-1111E

— QUANTITIES —

ITEM	UNIT	1111-W QUAN.	1111-E QUAN.	1111-E (NON-PARTICIPATING) QUAN.
TURE EXCAVATION	C.Y.	1132.0	1060.0	
LL	C.Y.	808.0	742.0	
A, CONCRETE(MAJOR)	C.Y.	602.3	589.0	6.9
AA, CONCRETE ED,(MAJOR)	C.Y.	400.8	393.9	38.9
REINFORCED ELASTO- EXPANSION JOINT ½" MOVEMENT	LIN. FT.	72.5	72.5	
RCING STEEL	LBS.	230,336.0	215,449.0	13,553.0
TURAL STEEL	LBS.	382,180.0	382,180.0	
AIL, TYPE "R"	LIN. FT.	371.3		371.3
SH STEEL PILES	LIN. FT.	934.7	941.2	
STEEL PILES	EACH	22	22	
S	EACH	5	5	

— GENERAL NOTES —

1. DESIGN SPECIFICATIONS: AASHO "STANDARD SPECIFICATIONS FOR HIGHWAY BRIDGES, 1961," AND "INTERIM SPECIFICATIONS THROUGH 1965."
2. CONSTRUCTION SPECIFICATIONS: STATE OF NEVADA DEPARTMENT OF HIGHWAYS "STANDARD SPECIFICATIONS FOR ROAD AND BRIDGE CONSTRUCTION, 1968," EXCEPT AS NOTED BELOW, AND IN THE SPECIAL PROVISIONS FOR THIS CONTRACT.
3. LIVE LOAD: STANDARD HS 20 - 44 OR ALTERNATE LOADING.
4. CONCRETE: ALL CONCRETE SHALL BE CLASS AA, MAJOR, EXCEPT FOR THE STRUCTURE DECK SECTION WHICH SHALL BE CLASS AA MODIFIED, 4,000 POUNDS PER SQUARE INCH CONCRETE AT 28 DAYS.
5. REINFORCING STEEL: ALL REINFORCING STEEL IS ASTM A615 GRADE 60. DIMENSIONS ARE TO CENTER OF BARS UNLESS OTHERWISE NOTED. BAR SIZES THREE (3) TO NINE (9) ARE INDICATED BY THE FIRST NUMBER IN THE MARK, TEN (10) OR LARGER BY THE FIRST TWO NUMBERS.
6. STRUCTURAL STEEL: ALL STRUCTURAL STEEL MEMBERS TO BE ASTM A36 STEEL UNLESS OTHERWISE NOTED.
7. CAMBER: THE CAMBER SHALL BE AS SHOWN ON THE PLANS.
8. PILING: ALL PILING TO BE 10-BP-42 H PILES. MINIMUM BEARING VALUE IS 45 TONS PER PILE.
9. PILE DRIVING: THE ENGINEERING NEW FORMULA P=2E/(S+0.1) SHALL BE USED TO DETERMINE THE BEARING VALUE OF THE PILES EXCEPT WHERE LOAD TESTS ARE REQUIRED. TERMS P, E, AND S ARE DEFINED IN ARTICLE 508.03.05 OF THE CONSTRUCTION SPECIFICATIONS.
10. SPREAD FOOTINGS: MAXIMUM BEARING VALUE FOR PIER FOOTING IS SIX (6) TONS PER SQUARE FOOT. THE BOTTOM OF ALL FOOTINGS SHALL EXTEND TO A DEPTH OF A MINIMUM OF TWO (2) FEET BELOW THE BEDROCK LIMIT LINES OF THE FOOTING BLOCK THROUGHOUT THE BEDROCK EXCAVATION DEPTH, AND FOOTING BLOCKS SHOULD BE POURED NEAT AGAINST THE ROCK. ANY INCREASE THERE IS IN QUANTITIES FROM PROVIDING THE TWO FOOT MINIMUM DEPTH INTO THE BEDROCK SHALL BE PAID FOR AT CONTRACT UNIT PRICES.
11. PEDESTRIAN RAILING: PEDESTRIAN RAILING TO BE PEDESTRIAN RAIL TYPE R.
12. FINE SURFACE FINISH: SURFACES REQUIRING A FINE FINISH ARE DESIGNATED ON THE PLANS BY THE ABBREVIATION "FSF."
13. CONSTRUCTION TYPE CODE: X071.

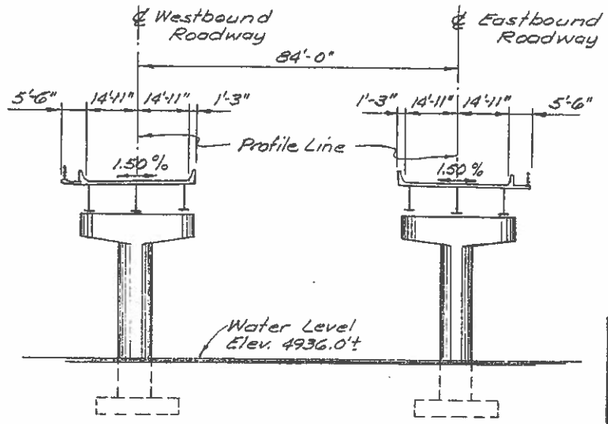

SECTION NORMAL TO I-80

STATE OF NEVADA
DEPARTMENT OF HIGHWAYS

B-1111E & B-1111W

GEOMETRICS AND GENERAL NOTES

FED. ROAD REG. NO.	STATE	PROJECT NO.	COUNTY	CONTROL SECTION	STATE ROUTE	SHEET NO.	TOTAL SHEETS
7	NEVADA	I-080-4(25) 285	ELKO	EL-081	1	B-27	

SC-3

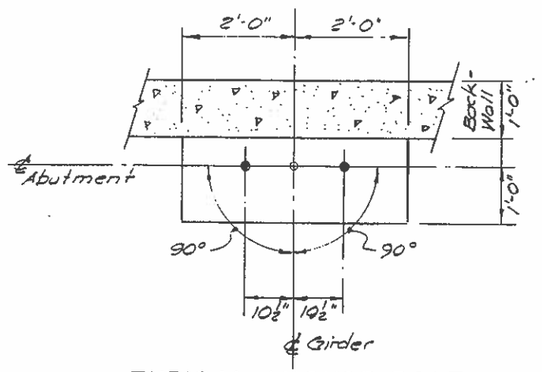

TYPICAL ANCHOR BOLT LAYOUT

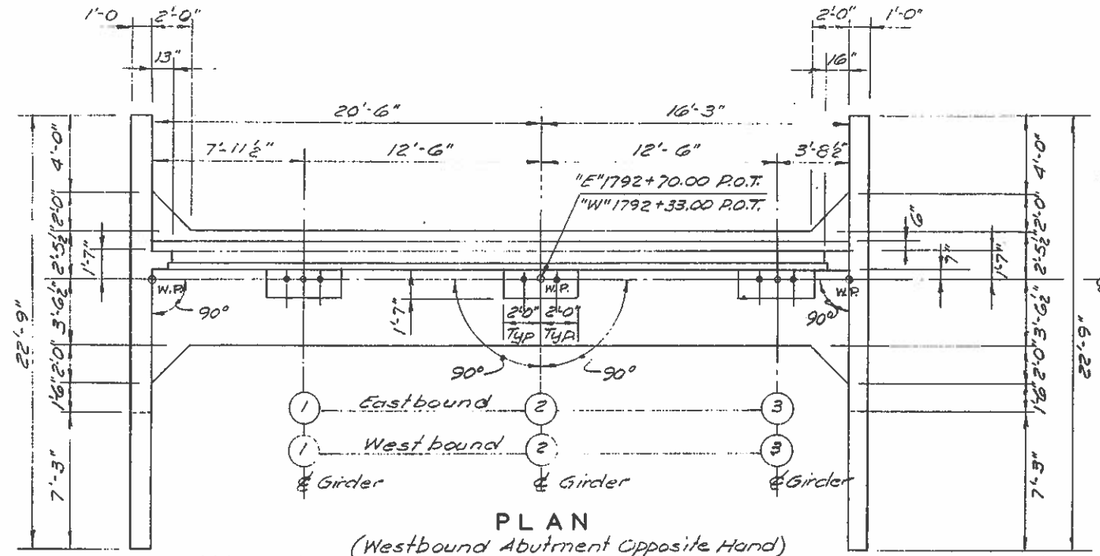

PLAN
(Westbound Abutment Opposite Hand)

All Piles 10 BP42 H Piles

B-1111E -
Minimum Pile Tip Penetration Elev. 4940.0'
Design Pile Tip Penetration Elev. 4920.00'.
El. 4925.0' used For Furnish Steel Pile Estimate.
45 Tons Per Pile.

B-1111W
Minimum Pile Tip Penetration Elev. 4945.0'
Design Pile Tip Penetration Elev. 4925.0'.
El. 4925.0' Used For Furnish Steel Pile Estimate.
45 Tons Per Pile.

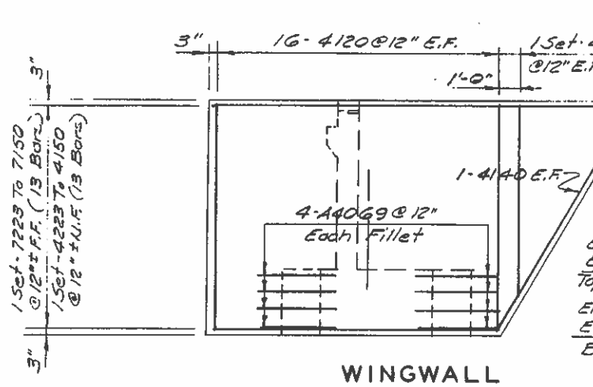

WINGWALL

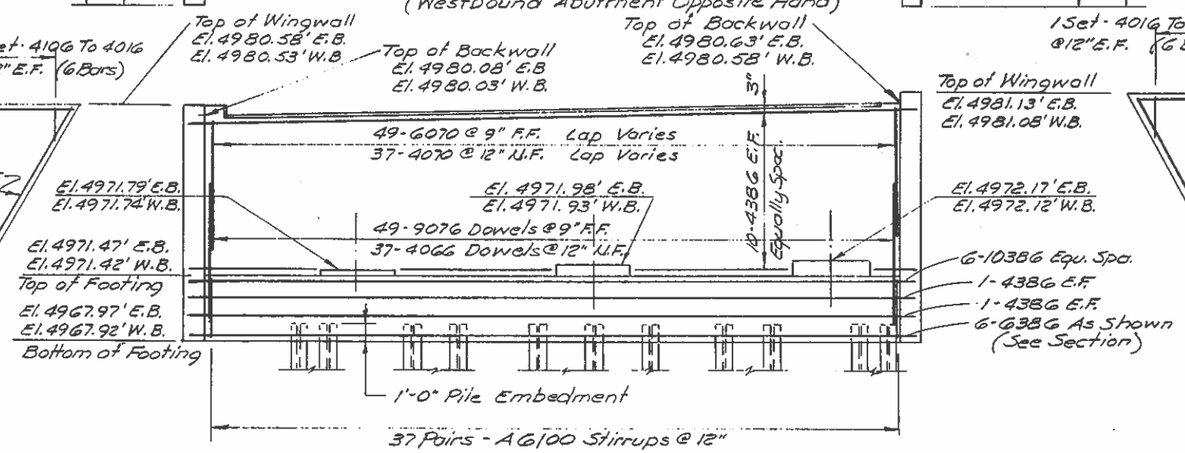

ELEVATION
(Westbound Abutment Opposite Hand)

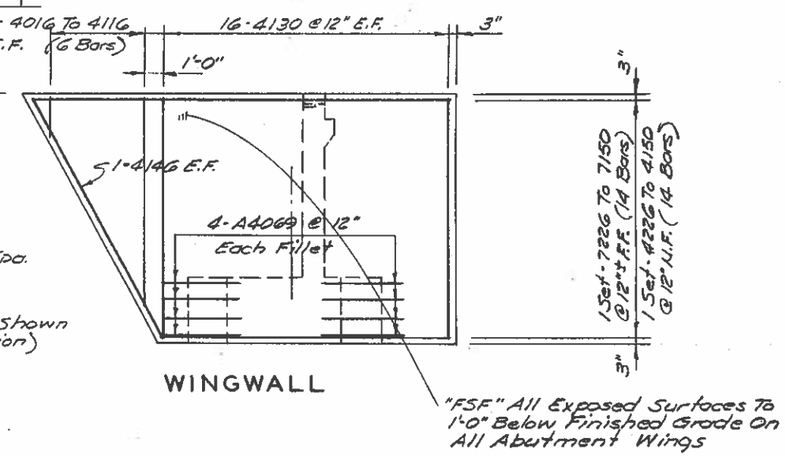

WINGWALL

"FSF" All Exposed Surfaces To 1'-0" Below Finished Grade On All Abutment Wings

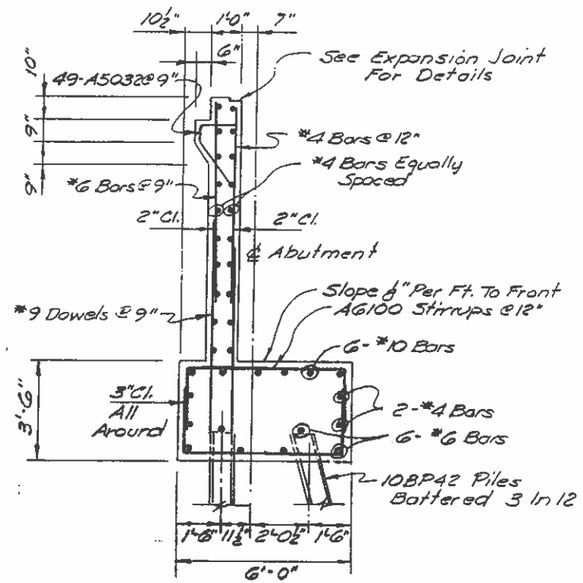

TYPICAL SECTION

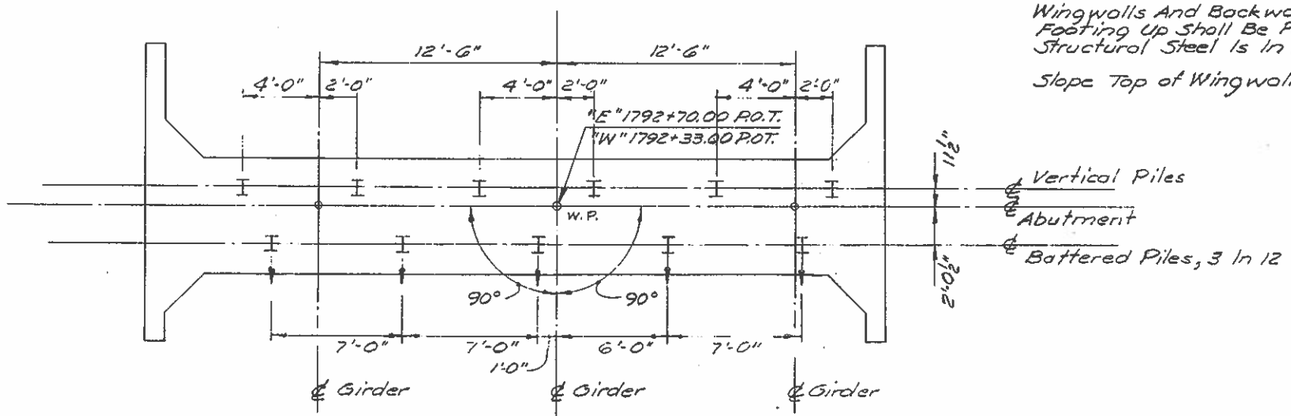

PILE PLAN
(Westbound Abutment Opposite Hand)

Wingwalls And Backwall From Top of Footing Up Shall Be Poured After The Structural Steel Is In Place.

Slope Top of Wingwall With Roadway Grade.

Piles Shown Thus I Are Vertical

Piles Shown Thus ⫪ Are Battered 3 In 12

STATE OF NEVADA
DEPARTMENT OF HIGHWAYS

B-1111E & B-1111W

WEST ABUTMENT DETAILS AND REINFORCING

FED. ROAD REG. NO.	STATE	PROJECT NO.	COUNTY	CONTROL SECTION	STATE ROUTE	SHEET NO.	TOTAL SHEETS
7	NEVADA	I-080-4(25)285	ELKO	EL-081	1	B-28	

SC-4

All Piles 10BP42 H Piles

B-1111.E
Minimum Pile Tip Penetration Elev. 4935.0'
Design Pile Tip Penetration Elev. 4915.0'
Elev. 4929.0' Used For Furnish Steel Pile Estimate.
45 Tons Per Pile.

B-1111.W
Minimum Pile Tip Penetration Elev. 4935.0'
Design Pile Tip Penetration Elev. 4915.0'
Elev. 4930.0' Used For Furnish Steel Pile Estimate.
45 Tons Per Pile.

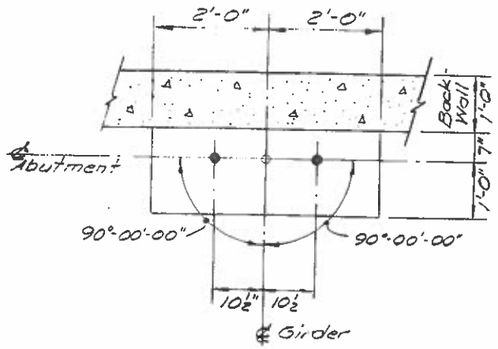

TYPICAL ANCHOR BOLT LAYOUT

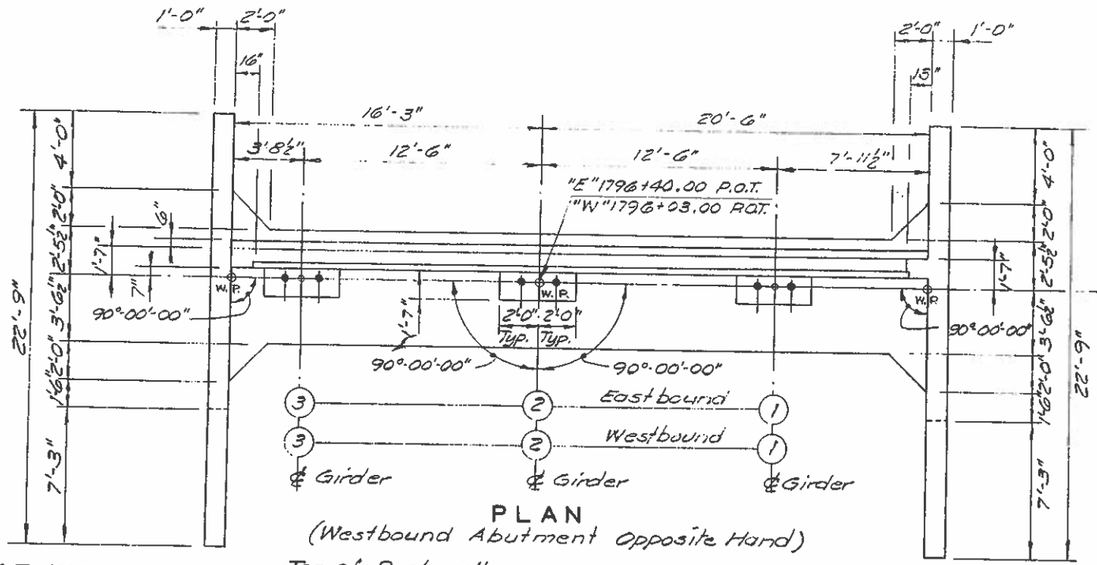

PLAN
(Westbound Abutment Opposite Hand)

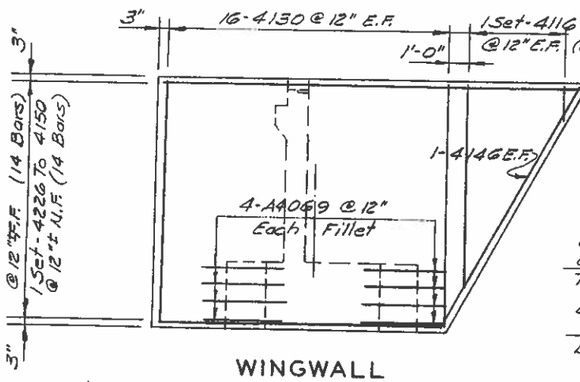

WINGWALL

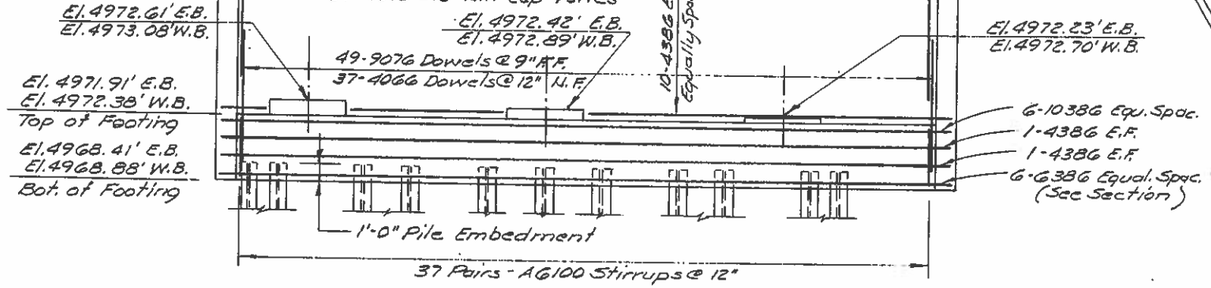

ELEVATION
(Westbound Abutment Opposite Hand)

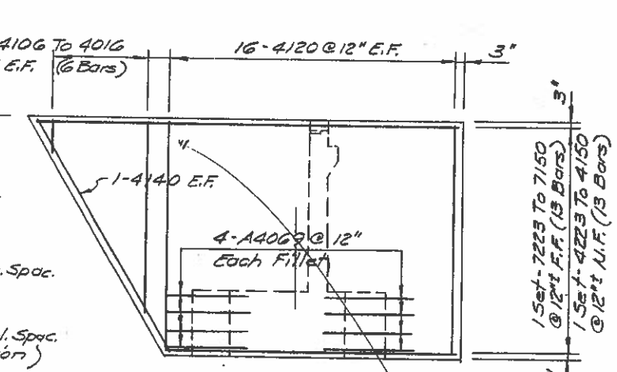

WINGWALL

"FSF" All Exposed Surfaces To 1'-0" Below Finished Grade On All Abutment Wings.

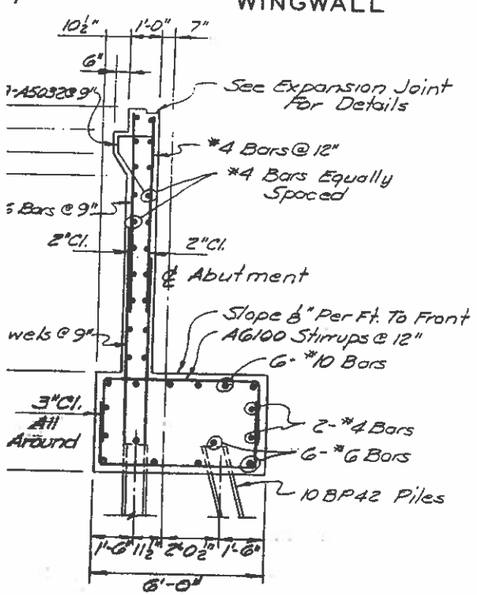

TYPICAL SECTION

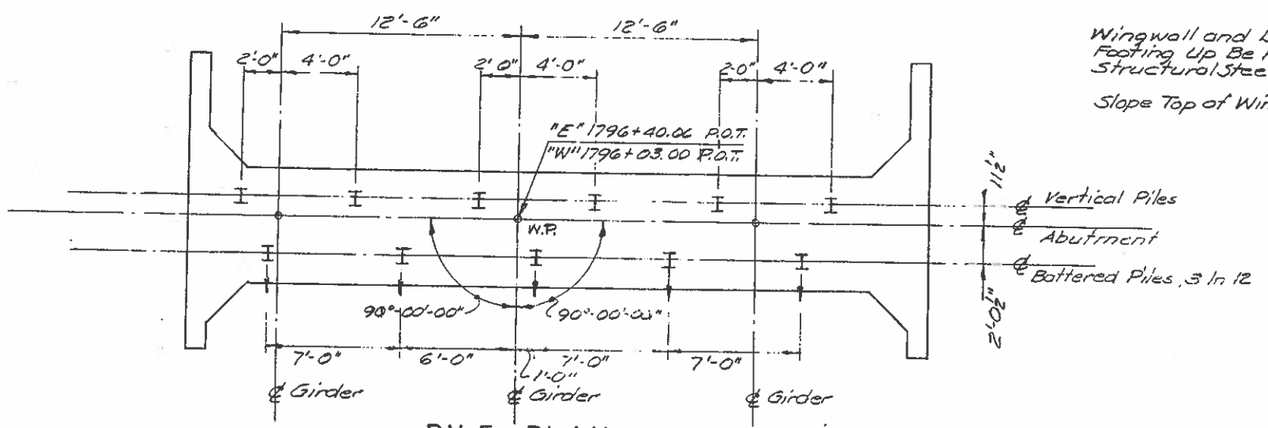

PILE PLAN
(Westbound Abutment Opposite Hand)

Wingwall and Backwall From Top of Footing Up Be Poured After The Structural Steel Is In Place.

Slope Top of Wingwalls With Roadway Grade.

Piles Shown Thus I Are Vertical.

Piles Shown Thus ⊥ Are Battered, 3 In 12.

STATE OF NEVADA
DEPARTMENT OF HIGHWAYS

B-1111E & B-1111W

EAST ABUTMENT DETAILS AND REINFORCING

#1908

FED. RD. REG. NO.	STATE	PROJECT NO.	COUNTY	SHEET NO.
9	NEVADA	SPI-080-4(1)	ELKO	2

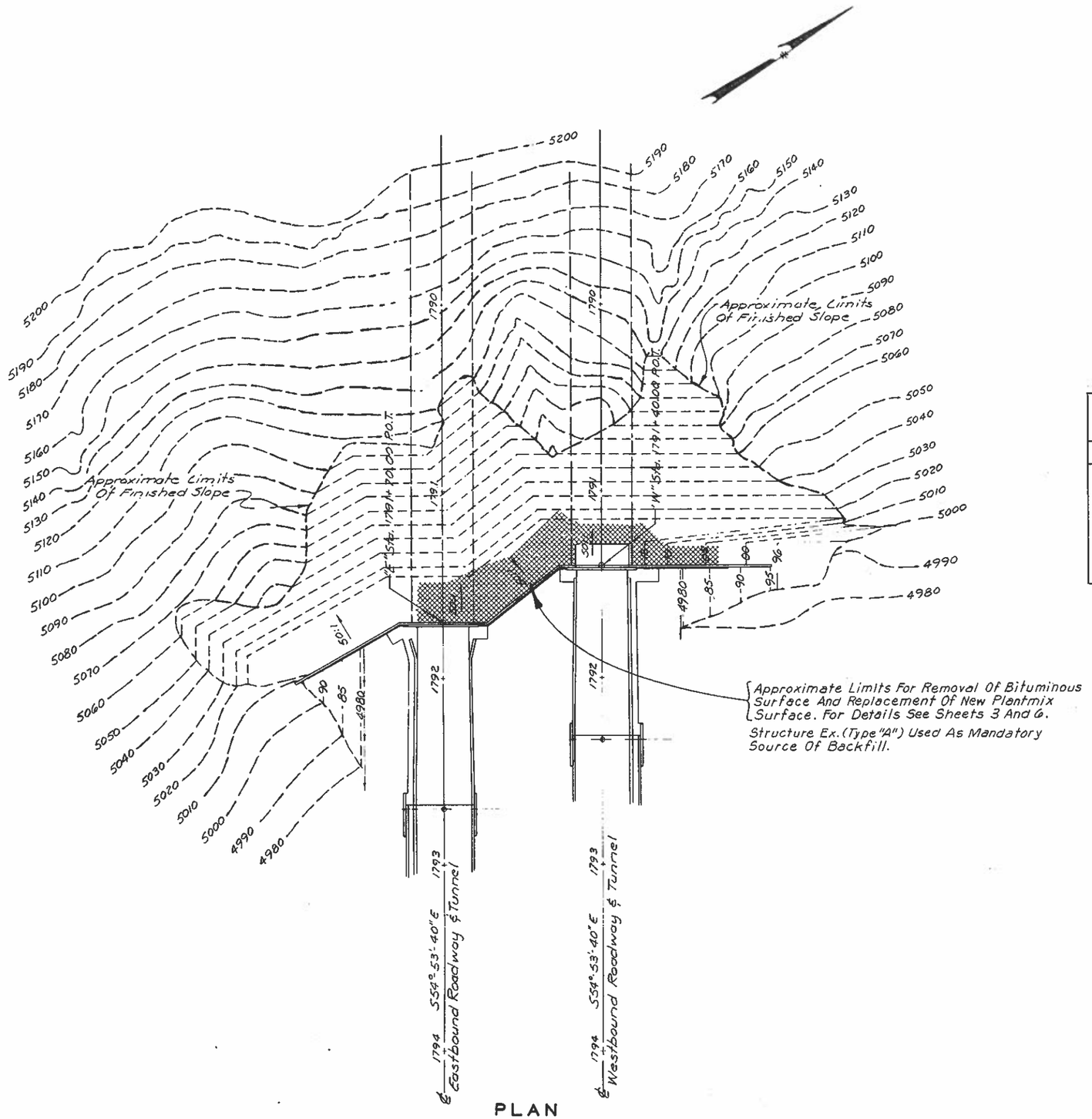

PLAN

ESTIMATE OF QUANTITIES
Quantities shown are approximate only and are subject to increase or decrease
TO BE CONTRACTED

ITEM NO.	TOTAL	UNIT	ITEM
202 0872	Lump Sum	----	Remove and reset barrier fence
202 2800	380	Sq Yd	Removal of bituminous surface
~~206 0100~~	~~720~~	~~Cu Yd~~	~~Structure excavation~~ SUPP. NO. 1
206 0101	~~500~~ 1220	Cu Yd	Structure excavation (Type A)
207 0100	500	Cu Yd	Backfill
402 6120	340	Sq Yd	Plantmix surfacing (2" Depth) (includes bituminous material)
624 0200	40	Hour	Flagman
625 0110	155	Sq Ft	Rent construction signs
625 0114	60	Each	Rent traffic cones
628 0100	Lump Sum	----	Mobilization
670 0511	29	Each	Install turnbuckles
670 1000	F.A.	----	Reposition and repair portal wall

THEORETICAL APPLICATION OF SURFACING MATERIALS

ASPHALT CEMENT, GRADE AR-4000	(PLANTMIX SURFACING)	4-1/2 PERCENT TO 6-1/2 PERCENT
LIQUID ASPHALT, TYPE MC-250	(SEAL COAT)	0.17 GAL. PER SQ. YD.

STATE OF NEVADA
DEPARTMENT OF TRANSPORTATION

IR80-EL8.05 E.

CARLIN CANYON TUNNELS
EAST PORTAL
EXISTING CONTOURS

FED. RD. REG. NO.	STATE	PROJECT NO.	COUNTY	SHEET NO.
9	NEVADA	SPI-080-4(1)	ELKO	3

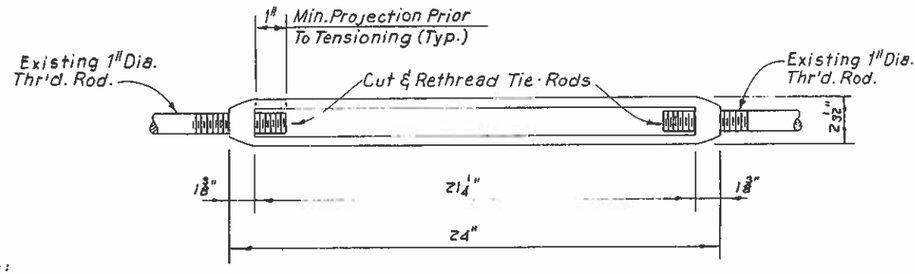

Notes:
1. Turnbuckles Shall Be Galvanized.
2. Apply Roofing Tar To Ends Of Tie Rods After Tensioning.

TURNBUCKLE DETAIL
(For Tensioning Portal Wall Tie Rods)

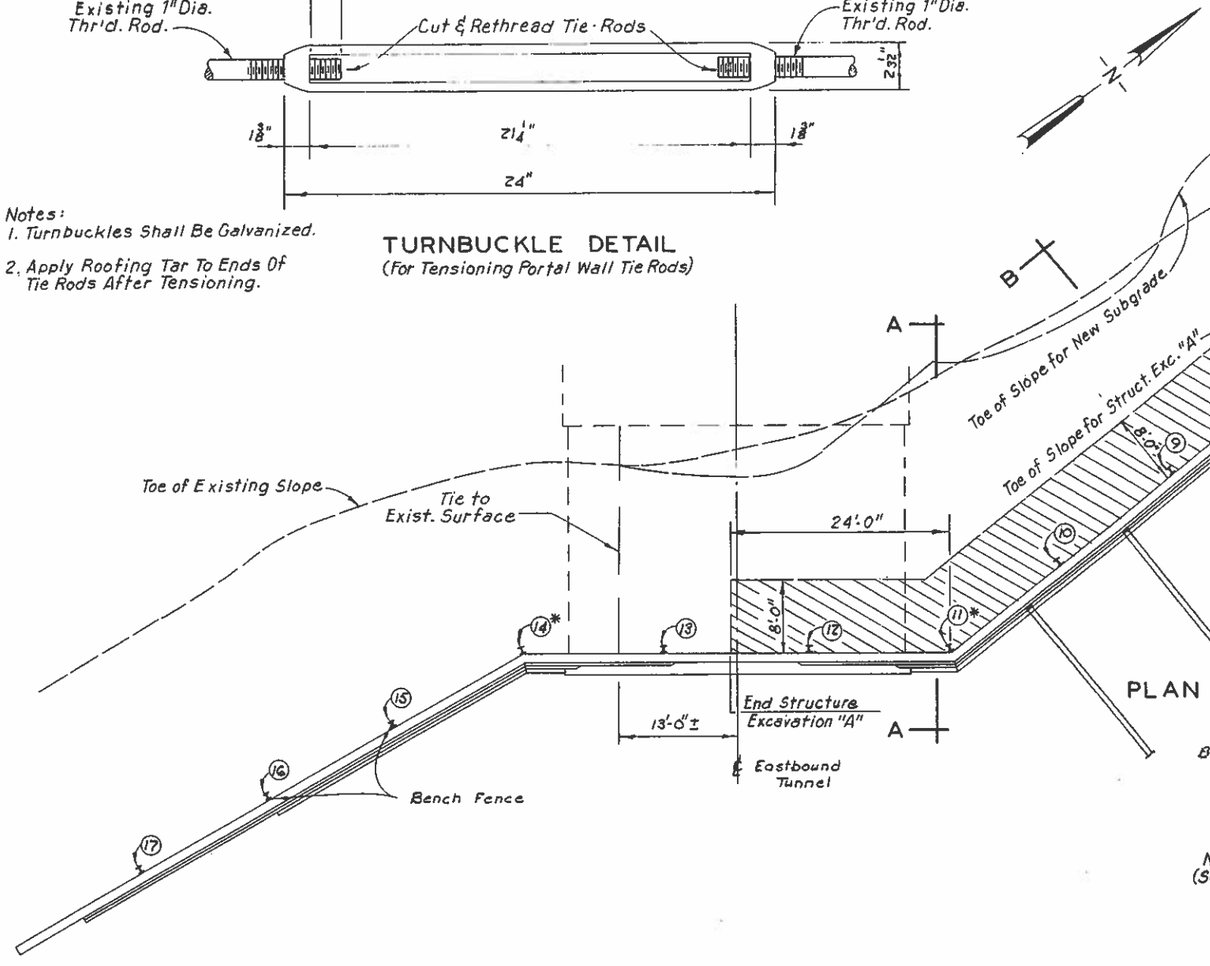

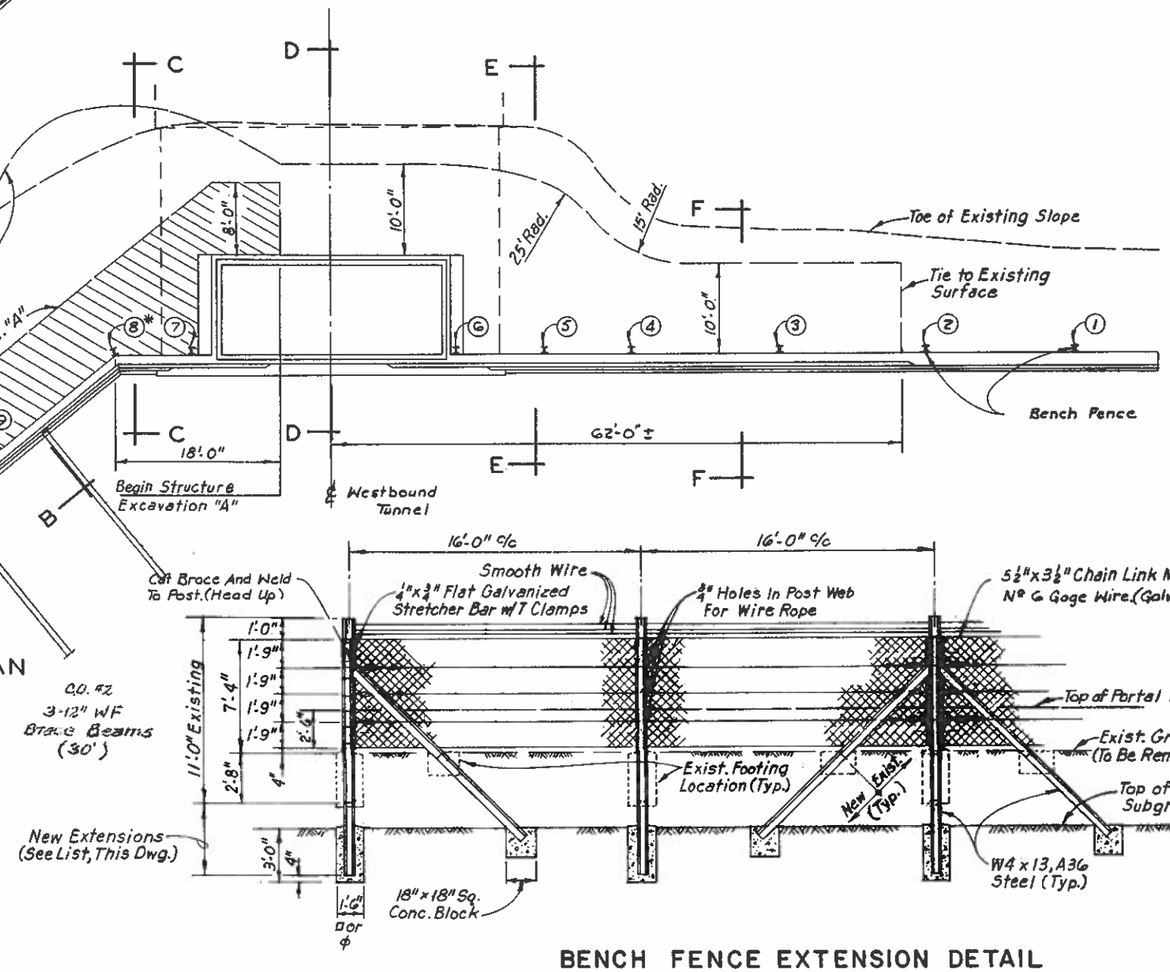

BENCH FENCE EXTENSION DETAIL

Notes:
1. Remove Fence From Posts 2 thru 14 During Construction.
2. Remove And Lengthen Existing Posts & Braces By Butt Welding Extensions Of Same Member Sizes.
3. Post & Brace Extensions Shall Be Galvanized Or Painted With Anti-corrosive Paint.
4. Reset Posts & Braces As Shown On Plans. Repour Footings As Shown.
5. Reset Existing Fence As Shown.

* – Indicates Posts With Braces.

APPROXIMATE EXTENSIONS

POST NO. 3	2½ FEET ±
POST NO. 4	5 FEET ±
POST NO. 5 THRU 11	6½ FEET ±
POST NO. 12	3 3/4 FEET ±
POST NO. 13	1½ FEET ±

STATE OF NEVADA
DEPARTMENT OF TRANSPORTATION

IR80-EL8.05E
EAST PORTAL PLAN

DRAWING TRACING

FED. RD. REG. NO.	STATE	PROJECT NO.	COUNTY	SHEET NO.
9	NEVADA	SPI-080-4(1)	ELKO	4

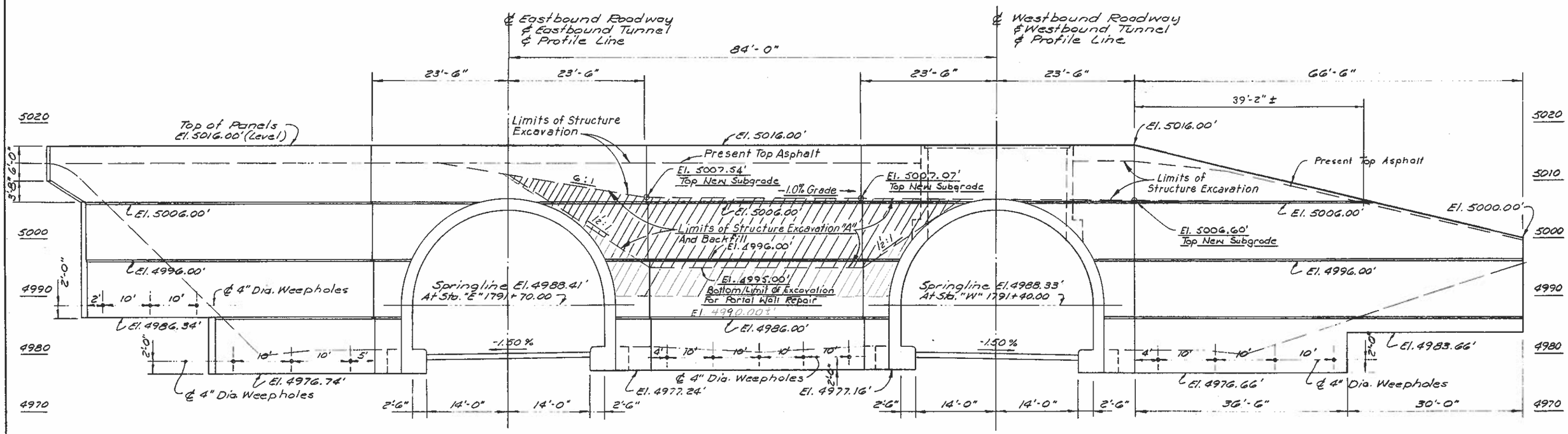

LEFT END PANEL | EASTBOUND TUNNEL PANEL | CENTER PANEL | WESTBOUND TUNNEL PANEL | RIGHT END PANEL

ELEVATION

NOTE:
All New Construction Underlined.

STATE OF NEVADA
DEPARTMENT OF TRANSPORTATION

IR80-EL 8.05E.

EAST PORTAL
ELEVATION

TRACING

FED. RD. REG. NO.	STATE	PROJECT NO.	COUNTY	SHEET NO.
9	NEVADA	SPI-080-4(1)	ELKO	5

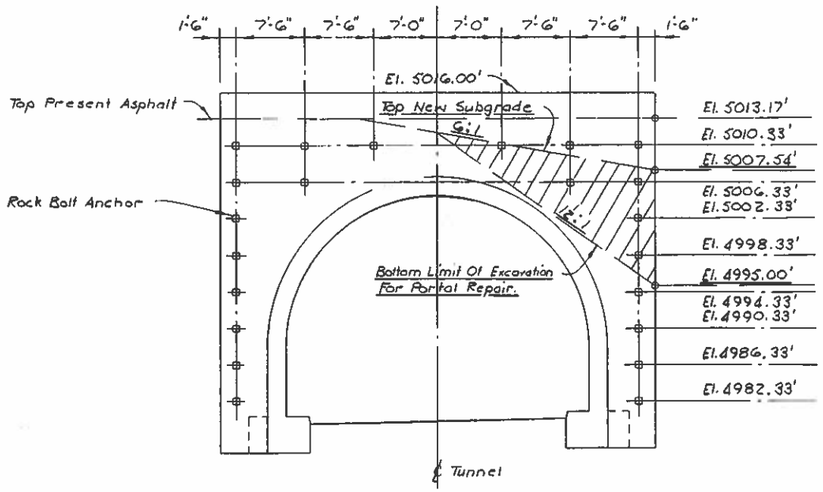

EASTBOUND TUNNEL PANEL

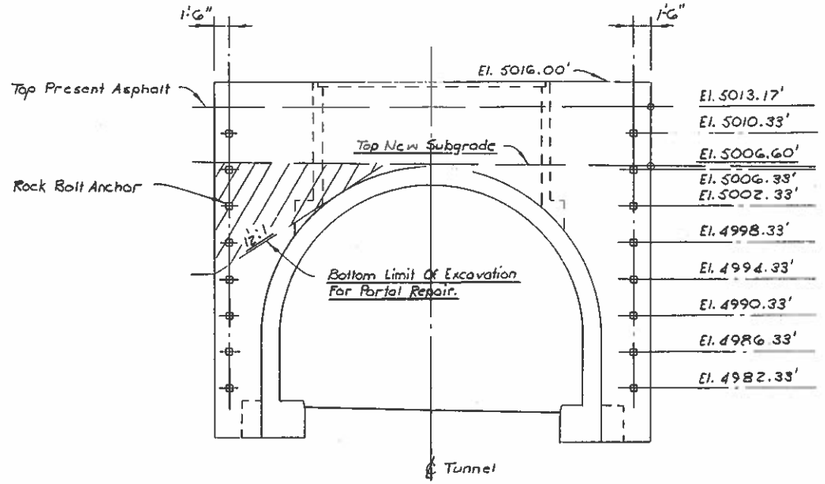

WESTBOUND TUNNEL PANEL

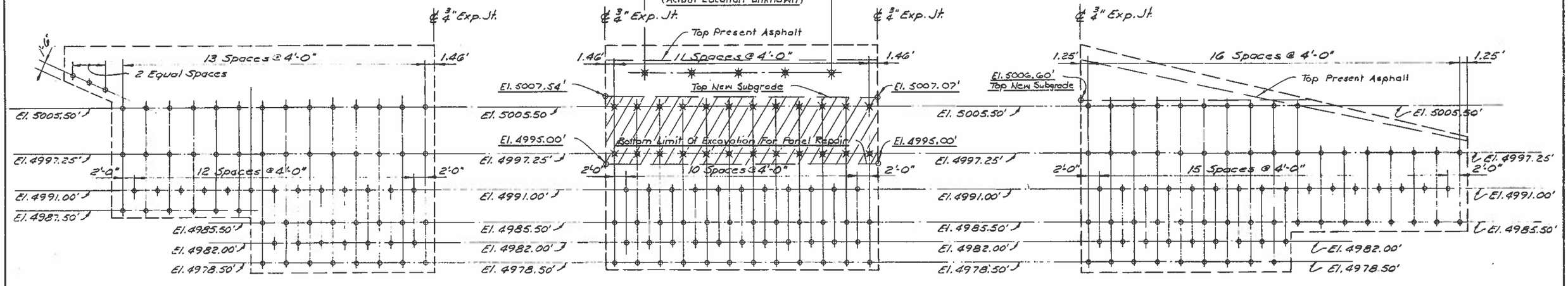

ELEVATIONS - FULL FACE

NOTES:

1. The Contractor Will Note Approximate Location Of Rock Bolts And Take Care To Protect From Damage.
2. All New Construction Underlined.
3. ⊠ - Indicates Rods To Be Tensioned.

STATE OF NEVADA
DEPARTMENT OF TRANSPORTATION

IR80-EL8.05E.

EAST PORTAL ROCK BOLT LAYOUT

TRACING

FED. RD. REG. NO.	STATE	PROJECT NO.	COUNTY	SHEET NO.
9	NEVADA	SPI-080-4(1)	ELKO	6

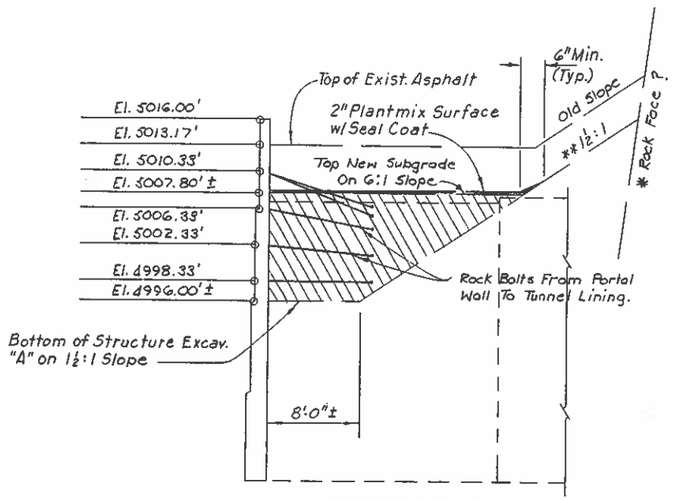

SECTION A-A

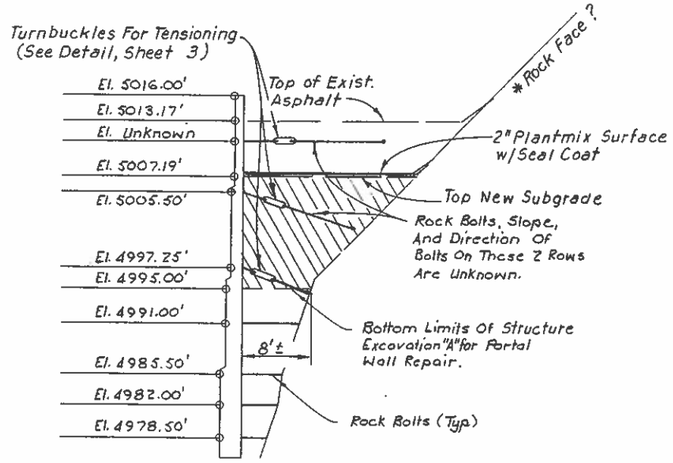

SECTION B-B

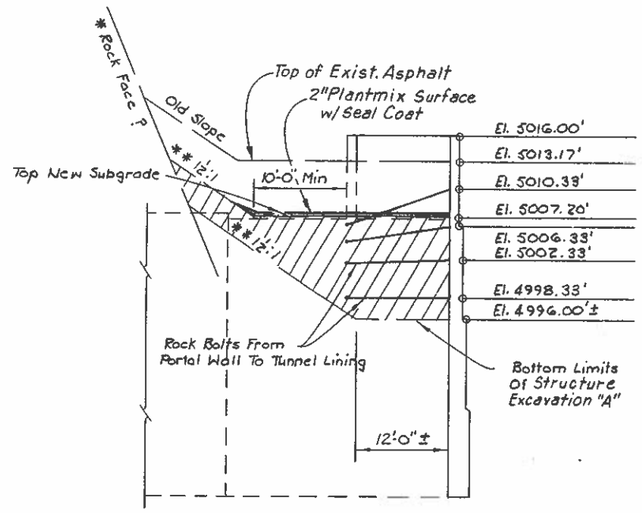

SECTION C-C

Notes:
1) ** 1½:1 Slope Is To Rock Face Only. No Rock Surface Will Be Reshaped To Conform With Slopes Shown On These Plans.
2) * Lines Representing Rock Faces Shown Are Approximations. Actual Locations Are Unknown.
3) Locations Of Rock Bolt Tie Rods May Vary From What Is Shown.

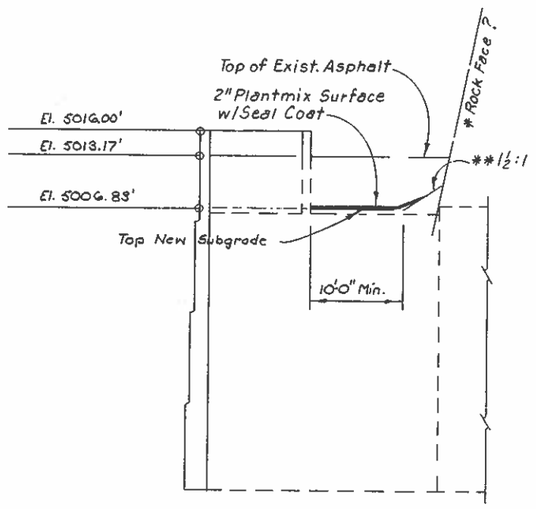

SECTION D-D

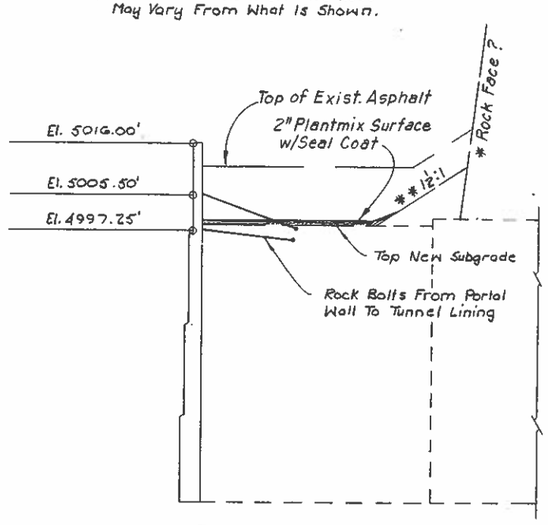

SECTION E-E

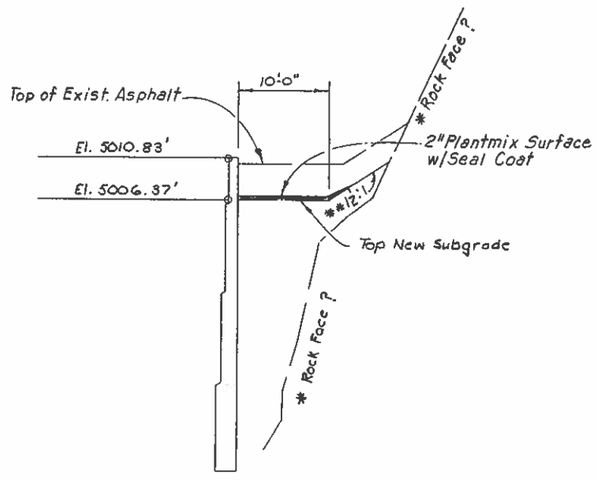

SECTION F-F

STATE OF NEVADA
DEPARTMENT OF TRANSPORTATION

IR80-EL8.05E.
TYPICAL SECTIONS

#1942

FED. RD. REG. NO.	STATE	PROJECT NO.	COUNTY	SHEET NO.
9	NEVADA	SPI-080-4(2)	ELKO	WR-2

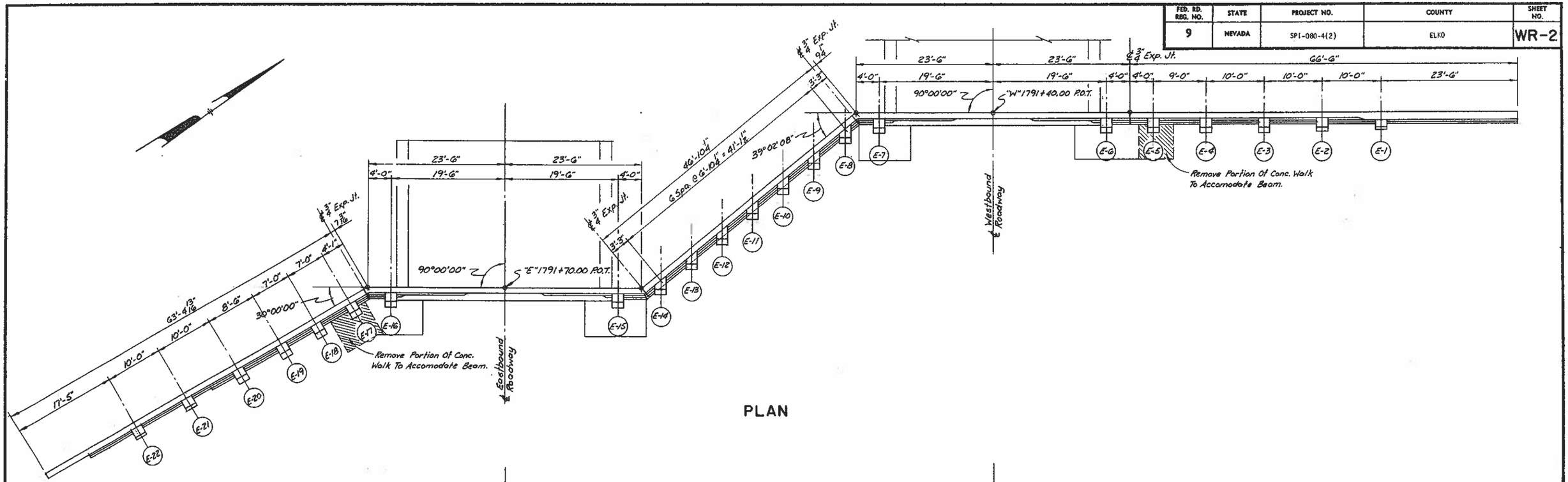

PLAN

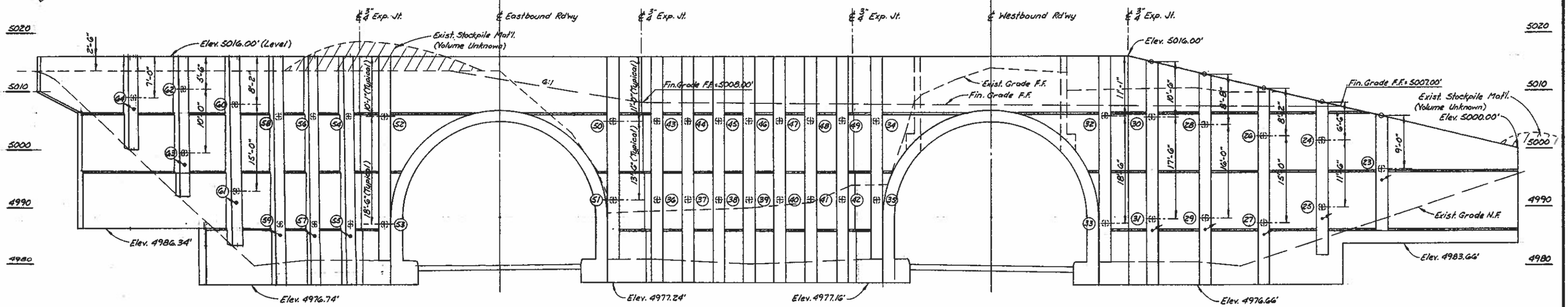

LEFT END PANEL | EASTBOUND TUNNEL PANEL | CENTER PANEL | WESTBOUND TUNNEL PANEL | RIGHT END PANEL

NOTE:
Tensioning Of Anchors Located In Center Panel Shall Follow The Sequence Of The Anchor Number.

ELEVATION

Indicates Horizontal Drain & Direction Of 10° Skew
SEE CONST. DETAIL SHT. WR-3

STATE OF NEVADA
DEPARTMENT OF TRANSPORTATION

EAST PORTAL PLAN & ELEVATION

DRAWING TRACING

FED. RD. REG. NO.	STATE	PROJECT NO.	COUNTY	SHEET NO.
9	NEVADA	SPI-080-4(2)	ELKO	WR-3

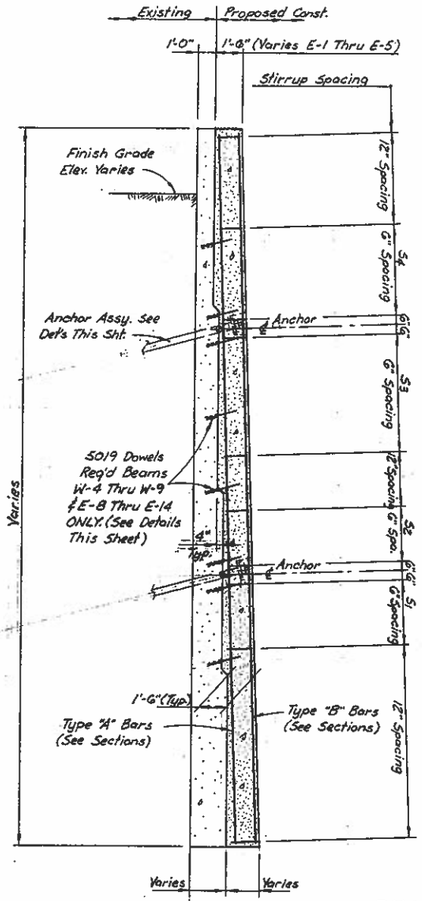

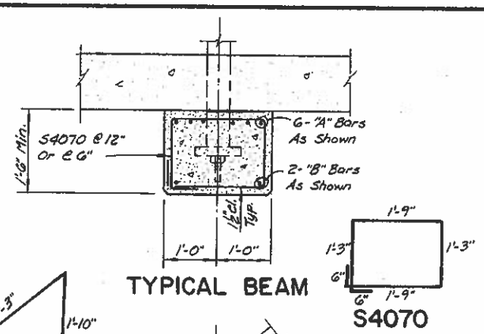

— BEAM SECTIONS —

BEAM Nº	LENGTH	STIRRUP DESIGNATION	BEAM REINFORCING S1	S2	S3	S4	# OF STIRRUPS REQ'D	"A" BAR DESIGNATION	"B" BAR DESIGNATION
W-1	20'-0"	S4070	3'-0"	1'-6"	1'-6"	1'-6"	28	A10199	B7199
W-2	36'-0"		7'-6"	4'-0"	4'-6"	5'-0"	57	A10359	B8359
W-3	35'-6"	S4070	7'-6"	4'-0"	4'-6"	5'-0"	57	A10353	B8353
W-4	39'-6"	S4073	8'-6"	4'-0"	4'-6"	5'-0"	62	A10393	B8393
W-5									
W-6									
W-7									
W-8									
W-9	39'-6"	S4073	8'-6"	4'-0"	4'-6"	5'-0"	62	A10393	B8393
W-10	35'-6"	S4070	7'-6"	4'-0"	4'-6"	5'-0"	57	A10353	B8353
W-11	35'-11"	S4070	7'-6"	4'-0"	4'-6"	5'-0"	57	A10358	B8358
E-1	20'-0"	S4070	4'-0"	4'-0"	-	-	28	A10198	B7198
E-2	26'-3"		3'-0"	1'-6"	2'-0"	1'-6"	34	A102511	B72511
E-3	33'-9"		3'-6"	3'-0"	6'-0"	4'-0"	50	A10335	B8335
E-4	36'-2"		3'-6"	3'-0"	6'-0"	5'-0"	54	A103510	B83510
E-5	38'-5"		3'-6"	3'-0"	6'-6"	5'-0"	57	A10381	B8381
E-6	35'-3"		3'-6"	3'-0"	6'-6"	5'-0"	53	A10350	B8350
E-7	34'-9"	S4070	-	-	-	-	35	A9346	B7346
✓ E-8	37'-10⅝"	S4074	-	-	-	-	39	A9387	B7387
✓ E-9	37'-4½"								
✓ E-10	37'-1"								
✓ E-11	37'-3"								
✓ E-12	37'-2"								
✓ E-13	37'-5"								
✓ E-14	37'-10⅝"	S4074	-	-	-	-	39	A9387	B7387
E-15	34'-10"	S4070	-	-	-	-	35	A9347	B7347
E-16	35'-3"		3'-6"	3'-0"	6'-6"	5'-0"	53	A10350	B8350
E-17	39'-3"		3'-6"	3'-0"	6'-6"	5'-0"	57	A10390	B8390
E-18	39'-3"		3'-6"	3'-0"	6'-6"	5'-0"	57	A10390	B8390
E-19	39'-3"		3'-6"	3'-0"	6'-6"	5'-0"	57	A10390	B8390
E-20	32'-6"		3'-6"	3'-0"	6'-0"	4'-0"	49	A10323	B8323
E-21	24'-0"		3'-0"	1'-6"	1'-6"	1'-6"	32	A10239	B7239
E-22	16'-0"	S4070	4'-0"	4'-0"	-	-	24	A10159	B7159

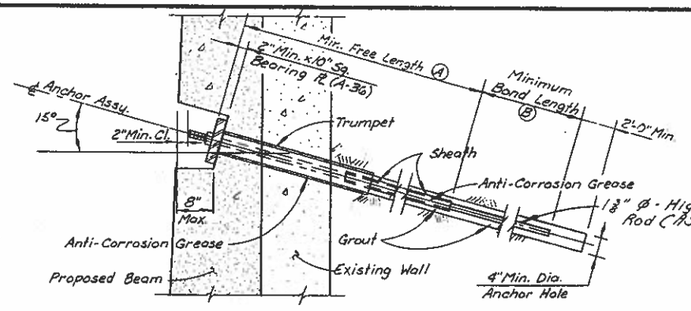

— ANCHOR ASSY. DETAILS —

▲ Designates Design Load (Tons)

ANCR #	▲	A	B	ANCR #	▲	A	B	ANCR #	▲	A	B
1	35.0	28'-6"	10'-0"	1 23	30.0	16'-0"	10'-0"	2 45	45.0	23'-6"	15'-6"
2	35.0	28'-0"	10	10 24	46.0	—	20	2 46		24'-0"	15
3	70.0	34'-0"	20	16 25	46.0	—	20	2 47		27'-0"	19
4		16'-0"	20	12 26	46.0	54'-7"	15	2 48		29'-0"	20
5		24'-0"	31	10 27	30.0	16'-0"	25	49		28'-6"	15
6		16'-0"	20	2 28	46.0	33'-0"	20	3350		28'-0"	15
7		33'-0"	21	12 29	70.0	15'-0"	25	2751	45.0	15'-0"	15'-0"
8		19'-0"	20	2 30	46.0	33'-0"	20	2752	70.0	22'-0"	19'-6"
9		23'-0"	20	15 31	70.0	25'-0"	30	2553		15'-0"	20
10		17'-0"	20	2 32	46.0	33'-0"	20	2354		23'-0"	21
11		23'-0"	20	2 33	70.0	25'-0"	30	1055		15'-0"	25
12		19'-0"	20	29 34	45.0	24'-0"	15'-0"	1756		19'-0"	22
13		23'-0"	20	2 35		15'-0"	15	957		15'-0"	26
14		19'-0"	20	13 36		—	17	2258		17'-6"	22
15		22'-0"	20	11 37		—	19	1059		15'-0"	25
16		19'-0"	20	11 38		—	19	1560		20'-0"	25
17		23'-0"	20	10 39		—	20	61	70.0	16'-6"	20
18		19'-0"	25	12 40		—	18	1562	35.0	20'-0"	15
19		22'-0"	30	14 41		—	16	1163	35.0	16'-0"	15
20		19'-0"	20	2 42		15'-0"	15	64	21.0	17'-0"	10'-0"
21		23'-0"	30	33 43		24'-0"	15				
22	70.0	18'-0"	10'-0"	29 44	45.0	23'-0"	15'-0"				

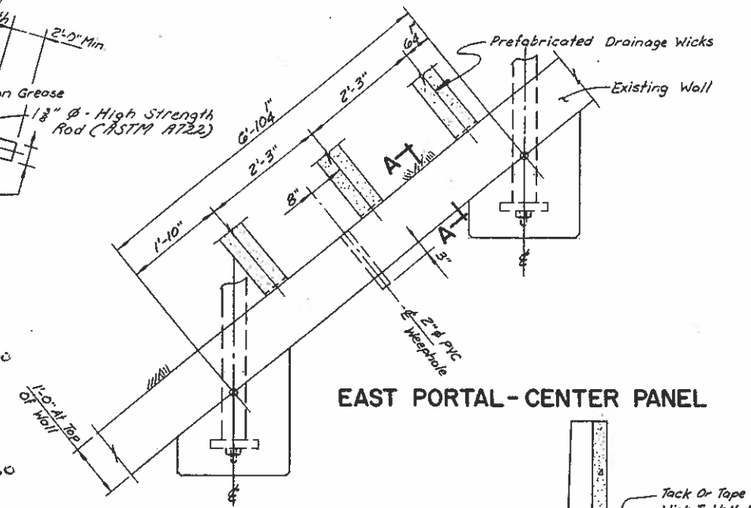

EAST PORTAL-CENTER PANEL

— WICK DRAIN DETAILS —

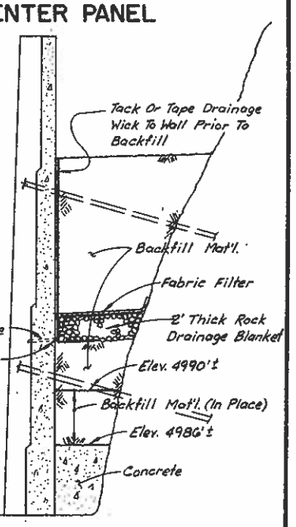

SECTION A-A

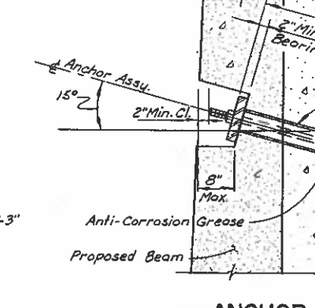

PLAN
WEST PORTAL-CENTER PANEL

PLAN
TYPICAL

*NOTE: 10° Skew Is Either To Right (Shown) Or Left. SEE PLAN & ELEV. SHT's.

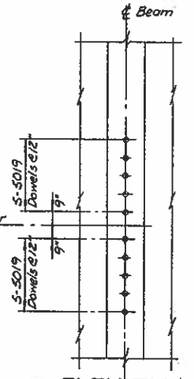

ELEVATION

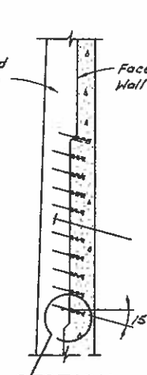

SECTION

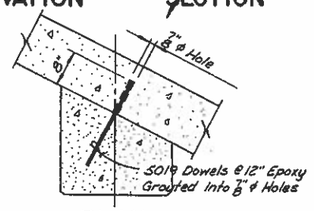

PLAN

— DOWEL DETAILS —

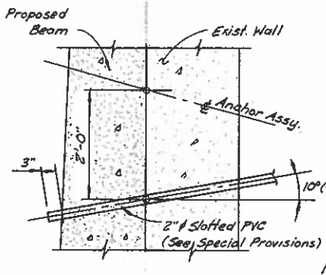

SECTION

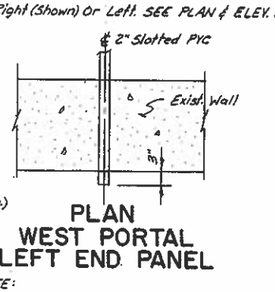

PLAN
WEST PORTAL
LEFT END PANEL

— HORIZ. DRAIN DETAILS —

NOTE:
Length Of Horiz. Drain Is Equal To Free Length For Anchor (See ANCHORAGE ASSY. DET.) Directly Above Drain - EXCEPT For West Portal; Left End Panel, Where Length = 20'-0".

STATE OF NEVADA
DEPARTMENT OF TRANSPORTATION

CONSTRUCTION DETAILS